10.2 Power Board
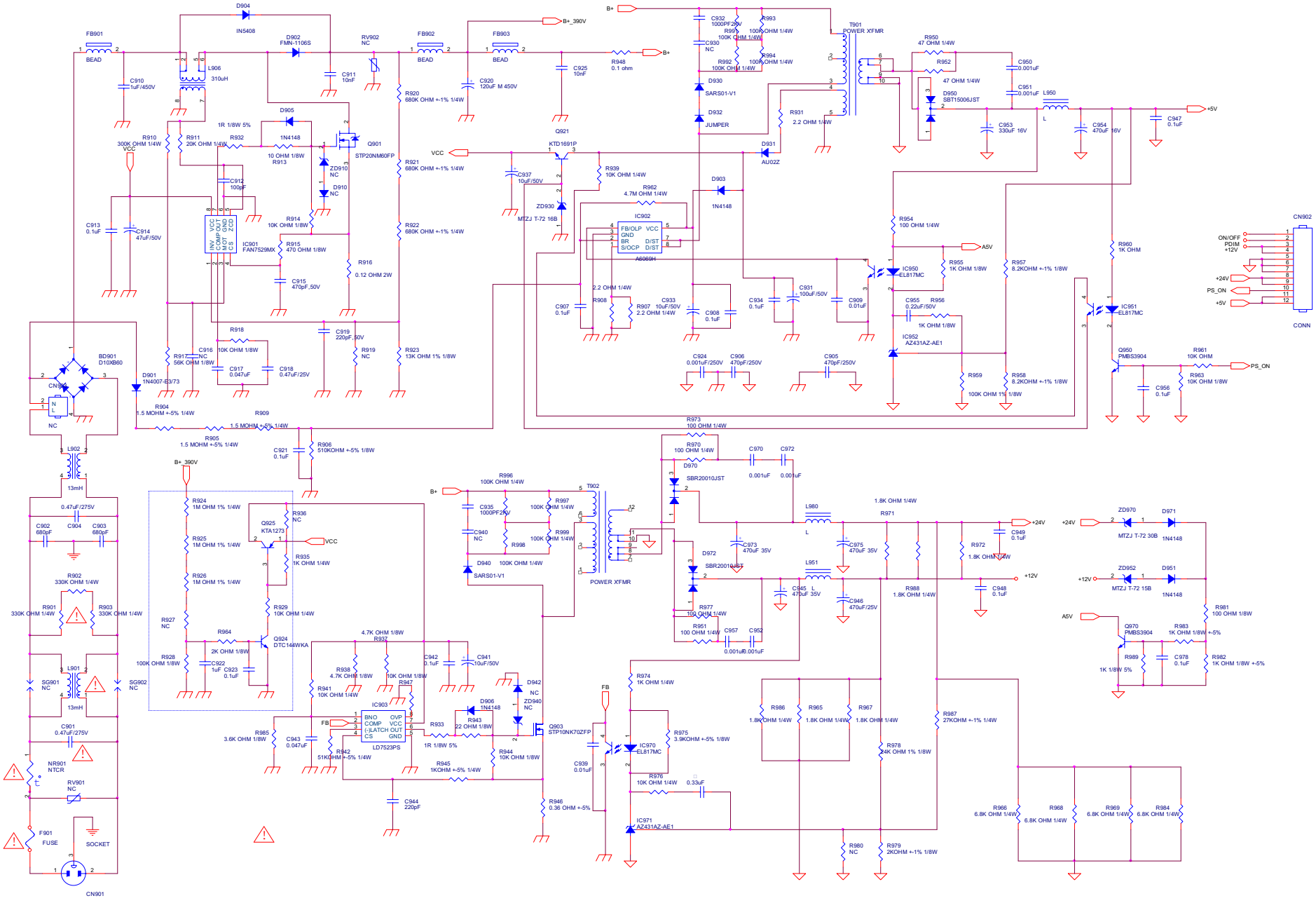
HL32D2 715G3332 1