DURABRAND

SERVICE MANUAL

23″ COLOR TELEVISION

DCT2405R

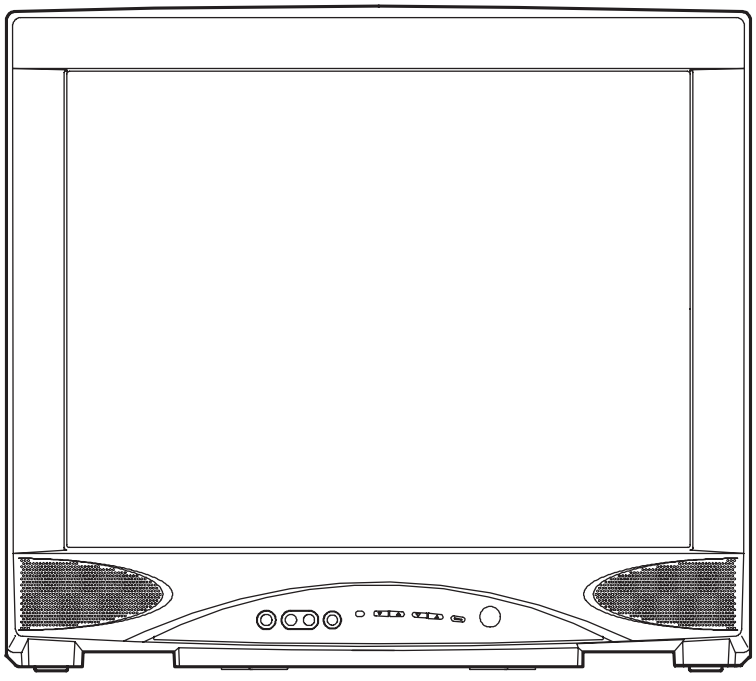

IMPORTANT SAFETY NOTICE

Proper service and repair is important to the safe, reliable operation of all Funai Equipment. The service procedures recommended by Funai and described in this service manual are effective methods of performing service operations. Some of these service special tools should be used when and as recommended.

It is important to note that this service manual contains various CAUTIONS and NOTICES which should be carefully read in order to minimize the risk of personal injury to service personnel. The possibility exists that improper service methods may damage the equipment. It also is important to understand that these CAUTIONS and NOTICES ARE NOT EXHAUSTIVE. Funai could not possibly know, evaluate and advice the service trade of all conceivable ways in which service might be done or of the possible hazardous consequences of each way. Consequently, Funai has not undertaken any such broad evaluation. Accordingly, a servicer who uses a service procedure or tool which is not recommended by Funai must first use all precautions thoroughly so that neither his safety nor the safe operation of the equipment will be jeopardized by the service method selected.

TABLE OF CONTENTS

Specifications 1-1
Important Safety Precautions 2-1
Standard Notes for Servicing 3-1
Cabinet Disassembly Instructions 4-1
Electrical Adjustment Instructions 5-1
How to initialize the Television 6-1
Block Diagrams 7-1
Schematic Diagrams / CBA's and Test Points 8-1
Waveforms 9-1
Wiring Diagram 10-1
IC Pin Function Descriptions 11-1
Exploded Views 12-1
Mechanical Parts List 13-1
Electrical Parts List 14-1

SPECIFICATIONS

< TUNER >

ANT. Input ---------- 75 ohm Unbal., F type
Reference Level---------- 20 Vp-p (CRT Green Cathode)
Test Input Signal ---------- 400 Hz 30% modulation

Description	Condition	Unit	Nominal	Limit
1. Intermediate Freq.	Picture Sound	MHz MHz	45.75 41.25	--- ---
2. Peak Picture Sens	VHF CATV UHF	dBμV dBμV dBμV	15 15 15	30 30 40
3. AFT Pull In Range (10 mV input)	---	MHz	±2.0	±0.7

< DEFLECTION >

Description	Condition	Unit	Nominal	Limit
1. Deflection Freq.	Horizontal Vertical	kHz Hz	15.734 60	--- ---
2. Linearity	Horizontal Vertical	% %	--- ---	±15 ±10
3. Over Scan	---	%	10	---
4. High Voltage	---	kV	29	---

< VIDEO & CHROMA >

Description	Condition	Unit	Nominal	Limit
1. Misconvergence	Center Side Corner	mm mm mm	--- --- ---	0.4 1.5 2.1
2. Brightness	APL 100%	Ft-L	30	24
3. Color Temperature	---	°K	9200 °K	---
4. Resolution	Horizontal Vertical	Line Line	250 300	--- ---

< AUDIO >

All items are measured across 8 Ω load at speaker output terminal.

Description	Condition	Unit	Nominal	Limit
1. Audio Output Power	10% THD	W	1	0.8
2. Audio Distortion (w/LPF)	500 mW	%	2	7
3. Audio Freq. Response	-3 dB	Hz	70 ~ 11 k	---

Note: Nominal specifications represent the design specifications. All units should be able to approximate these. Some will exceed and some may drop slightly below these specifications. Limit specifications represent the absolute worst condition that still might be considered acceptable. In no case should a unit fail to meet limit specifications.

IMPORTANT SAFETY PRECAUTIONS

Prior to shipment from the factory, our products are strictly inspected for recognized product safety and electrical codes of the countries in which they are to be sold. However, in order to maintain such compliance, it is equally important to implement the following precautions when a set is being serviced.

Safety Precautions for TV Circuit

1. **Before returning an instrument to the customer,** always make a safety check of the entire instrument, including, but not limited to, the following items:
   - **a.** Be sure that no built-in protective devices are defective and have been defeated during servicing. (1) Protective shields are provided on this chassis to protect both the technician and the customer. Correctly replace all missing protective shields, including any removed for servicing convenience. (2) When reinstalling the chassis and/or other assembly in the cabinet, be sure to put back in place all protective devices, including but not limited to, nonmetallic control knobs, insulating fishpapers, adjustment and compartment covers/shields, and isolation resistor/capacitor networks. **Do not operate this instrument or permit it to be operated without all protective devices correctly installed and functioning. Servicers who defeat safety features or fail to perform safety checks may be liable for any resulting damage.**
   - **b.** Be sure that there are no cabinet openings through which an adult or child might be able to insert their fingers and contact a hazardous voltage. Such openings include, but are not limited to, (1) spacing between the picture tube and the cabinet mask, (2) excessively wide cabinet ventilation slots, and (3) an improperly fitted and/or incorrectly secured cabinet back cover.
   - **c. Antenna Cold Check -** With the instrument AC plug removed from any AC source, connect an electrical jumper across the two AC plug prongs. Place the instrument AC switch in the on position. Connect one lead of an ohmmeter to the AC plug prongs tied together and touch the other ohmmeter lead in turn to each tuner antenna input exposed terminal screw and, if applicable, to the coaxial connector. If the measured resistance is less than 1.0 megohm or greater than 5.2 megohm, an abnormality exists that must be corrected before the instrument is returned to the customer. Repeat this test with the instrument AC switch in the off position.
   - **d. Leakage Current Hot Check -** With the instrument completely reassembled, plug the AC line cord directly into a 120 V AC outlet. (Do not use an isolation transformer during this test.) Use a leakage current tester or a metering system that complies with American National Standards Institute (ANSI) C101.1 Leakage Current for Appliances and Underwriters Laboratories (UL) 1410, (50.7). With the instrument AC switch first in the on position and then in the off position, measure from a known earth ground (metal water pipe, conduit, etc.) to all exposed metal parts of the instrument (antennas, handle brackets, metal cabinet, screw heads, metallic overlays, control shafts, etc.), especially any exposed metal parts that offer an electrical return path to the chassis. Any current measured must not exceed 0.5 milli-ampere. Reverse the instrument power cord plug in the outlet and repeat the test.

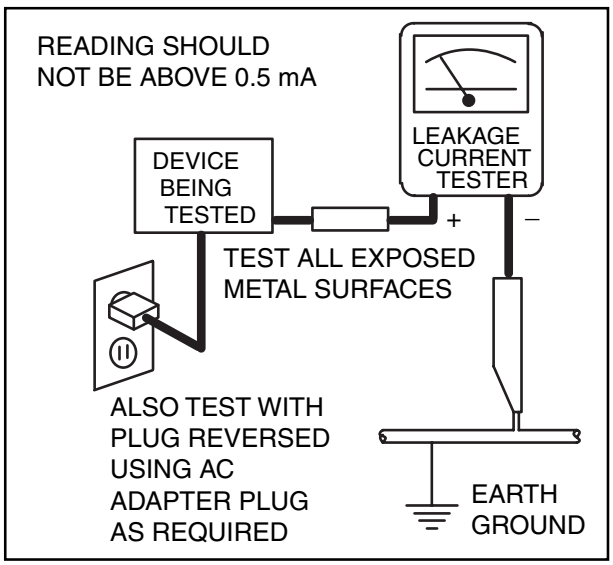

ANY MEASUREMENTS NOT WITHIN THE LIMITS SPECIFIED HEREIN INDICATE A POTENTIAL SHOCK HAZARD THAT MUST BE ELIMINATED BEFORE RETURNING THE INSTRUMENT TO THE CUSTOMER OR BEFORE CONNECTING THE ANTENNA OR ACCESSORIES.

- **e. X-Radiation and High Voltage Limits -** Because the picture tube is the primary potential source of X-radiation in solid-state TV receivers, it is specially constructed to prohibit X-radiation emissions. For continued X-radiation protection, the replacement picture tube must be the same type as the original.

Also, because the picture tube shields and mounting hardware perform an X-radiation protection function, they must be correctly in place. High voltage must be measured each time servicing is performed that involves B+, horizontal deflection or high voltage. Correct operation of the X-radiation protection circuits also must be reconfirmed each time they are serviced. (X-radiation protection circuits also may be called “horizontal disable” or “hold down.”) Read and apply the high voltage limits and, if the chassis is so equipped, the X-radiation protection circuit specifications given on instrument labels and in the Product Safety & X-Radiation Warning note on the service data chassis schematic. High voltage is maintained within specified limits by close tolerance safety-related components/ adjustments in the high-voltage circuit. If high voltage exceeds specified limits, check each component specified on the chassis schematic and take corrective action.

2. Read and comply with all caution and safety-related notes on or inside the receiver cabinet, on the receiver chassis, or on the picture tube.
3. **Design Alteration Warning -** Do not alter or add to the mechanical or electrical design of this TV receiver. Design alterations and additions, including, but not limited to circuit modifications and the addition of items such as auxiliary audio and/or video output connections, might alter the safety characteristics of this receiver and create a hazard to the user. Any design alterations or additions will void the manufacturer's warranty and may make you, the servicer, responsible for personal injury or property damage resulting therefrom.
4. **Picture Tube Implosion Protection Warning -** The picture tube in this receiver employs integral implosion protection. For continued implosion protection, replace the picture tube only with one of the same type number. Do not remove, install, or otherwise handle the picture tube in any manner without first putting on shatterproof goggles equipped with side shields. People not so equipped must be kept safely away while picture tubes are handled. Keep the picture tube away from your body. Do not handle the picture tube by its neck. Some “in-line” picture tubes are equipped with a permanently attached deflection yoke; because of potential hazard, do not try to remove such “permanently attached” yokes from the picture tube.
5. **Hot Chassis Warning -**
   a. Some TV receiver chassis are electrically connected directly to one conductor of the AC power cord and maybe safety-serviced without an isolation transformer only if the AC power plug is inserted so that the chassis is connected to the ground side of the AC power source. To confirm that the AC power plug is inserted correctly, with an AC voltmeter, measure between the chassis and a known earth ground. If a voltage reading in excess of 1.0V is obtained, remove and reinsert the AC power plug in the opposite polarity and again measure the voltage potential between the chassis and a known earth ground.
   b. Some TV receiver chassis normally have 85V AC(RMS) between chassis and earth ground regardless of the AC plug polarity. This chassis can be safety-serviced only with an isolation transformer inserted in the power line between the receiver and the AC power source, for both personnel and test equipment protection.
   c. Some TV receiver chassis have a secondary ground system in addition to the main chassis ground. This secondary ground system is not isolated from the AC power line. The two ground systems are electrically separated by insulation material that must not be defeated or altered.
6. Observe original lead dress. Take extra care to assure correct lead dress in the following areas: a. near sharp edges, b. near thermally hot parts-be sure that leads and components do not touch thermally hot parts, c. the AC supply, d. high voltage, and, e. antenna wiring. Always inspect in all areas for pinched, out of place, or frayed wiring. Check AC power cord for damage.
7. Components, parts, and/or wiring that appear to have overheated or are otherwise damaged should be replaced with components, parts, or wiring that meet original specifications. Additionally, determine the cause of overheating and/or damage and, if necessary, take corrective action to remove any potential safety hazard.
8. **Product Safety Notice -** Some electrical and mechanical parts have special safety-related characteristics which are often not evident from visual inspection, nor can the protection they give necessarily be obtained by replacing them with components rated for higher voltage, wattage, etc.. Parts that have special safety characteristics are identified by a ⚠ on schematics and in parts lists. Use of a substitute replacement that does not have the same safety characteristics as the recommended replacement part might create shock, fire, and/or other hazards. The product's safety is under review continuously and new instructions are issued whenever appropriate. Prior to shipment from the factory, our products are strictly inspected to confirm they comply with the recognized product safety and electrical codes

of the countries in which they are to be sold. However, in order to maintain such compliance, it is equally important to implement the following precautions when a set is being serviced.

Precautions during Servicing

A. Parts identified by the ⚠ symbol are critical for safety.
Replace only with part number specified.

B. In addition to safety, other parts and assemblies are specified for conformance with regulations applying to spurious radiation. These must also be replaced only with specified replacements.
Examples: RF converters, RF cables, noise blocking capacitors, and noise blocking filters, etc.

C. Use specified internal wiring. Note especially:
1) Wires covered with PVC tubing
2) Double insulated wires
3) High voltage leads

D. Use specified insulating materials for hazardous live parts. Note especially:
1) Insulation Tape
2) PVC tubing
3) Spacers
4) Insulators for transistors.

E. When replacing AC primary side components (transformers, power cord, etc.), wrap ends of wires securely about the terminals before soldering.

F. Observe that the wires do not contact heat producing parts (heat sinks, oxide metal film resistors, fusible resistors, etc.)

G. Check that replaced wires do not contact sharp edged or pointed parts.

H. When a power cord has been replaced, check that 5~6 kg of force in any direction will not loosen it.

I. Also check areas surrounding repaired locations.

J. Use care that foreign objects (screws, solder droplets, etc.) do not remain inside the set.

K. Crimp type wire connector
The power transformer uses crimp type connectors which connect the power cord and the primary side of the transformer. When replacing the transformer, follow these steps carefully and precisely to prevent shock hazards.
Replacement procedure
1) Remove the old connector by cutting the wires at a point close to the connector.
Important: Do not re-use a connector (discard it).
2) Strip about 15 mm of the insulation from the ends of the wires. If the wires are stranded, twist the strands to avoid frayed conductors.
3) Align the lengths of the wires to be connected. Insert the wires fully into the connector.
4) Use the crimping tool to crimp the metal sleeve at the center position. Be sure to crimp fully to the complete closure of the tool.

L. When connecting or disconnecting the internal connectors, first, disconnect the AC plug from the AC supply outlet.

Safety Check after Servicing

Examine the area surrounding the repaired location for damage or deterioration. Observe that screws, parts and wires have been returned to original positions. Afterwards, perform the following tests and confirm the specified values in order to verify compliance with safety standards.

1. Clearance Distance

When replacing primary circuit components, confirm specified clearance distance (d) and (d') between soldered terminals, and between terminals and surrounding metallic parts. (See Fig. 1)

Table 1: Ratings for selected area

AC Line Voltage	Region	Clearance Distance (d), (d')
110 to 130 V	U.S.A. or Canada	≥ 3.2 mm (0.126 inches)

Note: This table is unofficial and for reference only. Be sure to confirm the precise values.

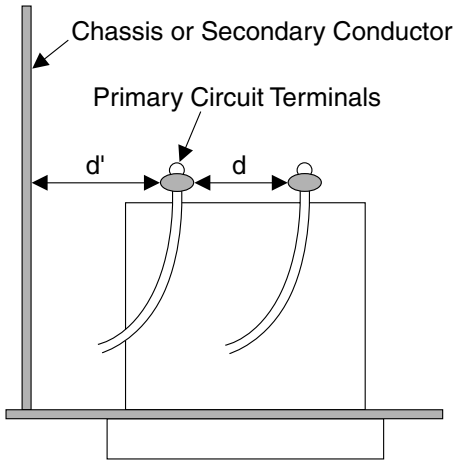

Fig. 1

2. Leakage Current Test

Confirm the specified (or lower) leakage current between B (earth ground, power cord plug prongs) and externally exposed accessible parts (RF terminals, antenna terminals, video and audio input and output terminals, microphone jacks, earphone jacks, etc.) is lower than or equal to the specified value in the table below.

Measuring Method: (Power ON)

Insert load Z between B (earth ground, power cord plug prongs) and exposed accessible parts. Use an AC voltmeter to measure across both terminals of load Z. See Fig. 2 and following table.

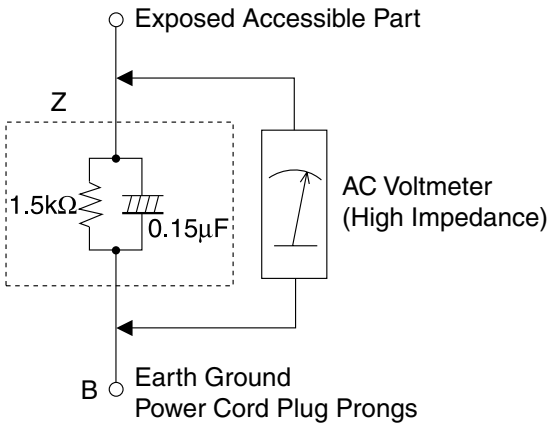

Fig. 2

Table 2: Leakage current ratings for selected areas

AC Line Voltage	Region	Load Z	Leakage Current (i)	Earth Ground (B) to:
110 to 130 V	U.S.A. or Canada	0.15 μF CAP. & 1.5 kΩ RES. Connected in parallel	i ≤ 0.5 mA rms	Exposed accessible parts

Note: This table is unofficial and for reference only. Be sure to confirm the precise values.

STANDARD NOTES FOR SERVICING

Circuit Board Indications

1. The output pin of the 3 pin Regulator ICs is indicated as shown.

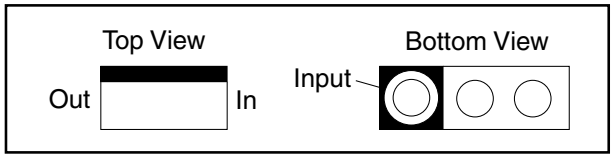

2. For other ICs, pin 1 and every fifth pin are indicated as shown.

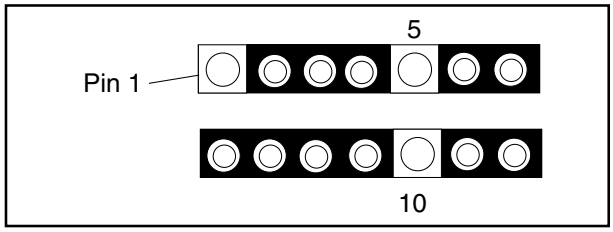

3. The 1st pin of every male connector is indicated as shown.

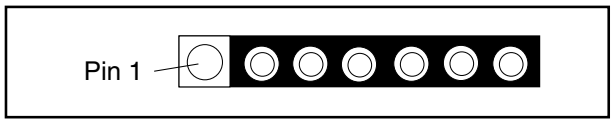

Pb (Lead) Free Solder

Pb free mark will be found on PCBs which use Pb free solder. (Refer to figure.) For PCBs with Pb free mark, be sure to use Pb free solder. For PCBs without Pb free mark, use standard solder.

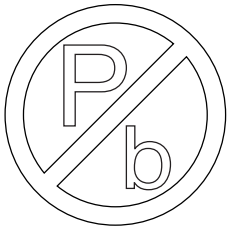

Pb free mark

How to Remove / Install Flat Pack-IC

1. Removal

With Hot-Air Flat Pack-IC Desoldering Machine:

1. Prepare the hot-air flat pack-IC desoldering machine, then apply hot air to the Flat Pack-IC (about 5 to 6 seconds). (Fig. S-1-1)

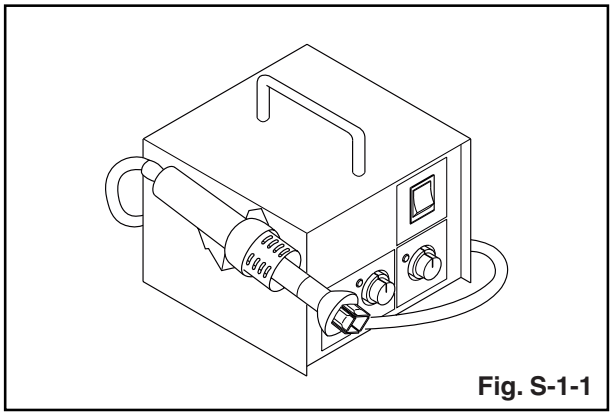

Fig. S-1-1

2. Remove the flat pack-IC with tweezers while applying the hot air.
3. Bottom of the flat pack-IC is fixed with glue to the CBA; when removing entire flat pack-IC, first apply soldering iron to center of the flat pack-IC and heat up. Then remove (glue will be melted). (Fig. S-1-6)
4. Release the flat pack-IC from the CBA using tweezers. (Fig. S-1-6)

CAUTION:

1. The Flat Pack-IC shape may differ by models. Use an appropriate hot-air flat pack-IC desoldering machine, whose shape matches that of the Flat Pack-IC.
2. Do not supply hot air to the chip parts around the flat pack-IC for over 6 seconds because damage to the chip parts may occur. Put masking tape around the flat pack-IC to protect other parts from damage. (Fig. S-1-2)

3. The flat pack-IC on the CBA is affixed with glue, so be careful not to break or damage the foil of each pin or the solder lands under the IC when removing it.

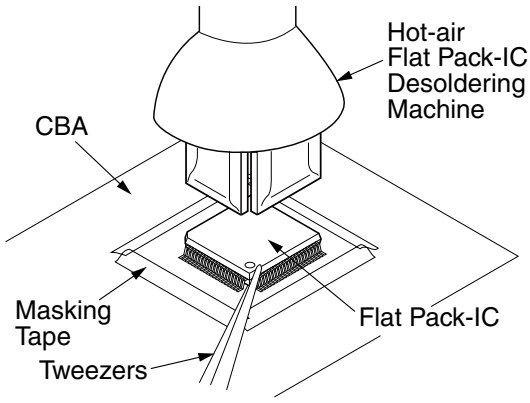

Fig. S-1-2

With Soldering Iron:

1. Using desoldering braid, remove the solder from all pins of the flat pack-IC. When you use solder flux which is applied to all pins of the flat pack-IC, you can remove it easily. (Fig. S-1-3)

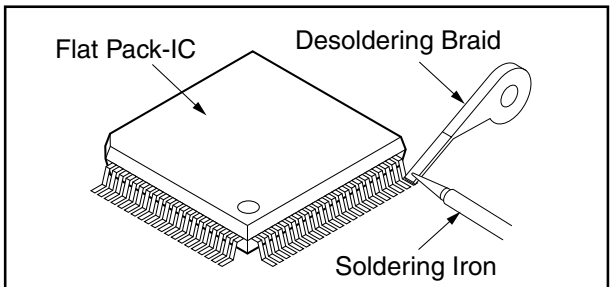

Fig. S-1-3

2. Lift each lead of the flat pack-IC upward one by one, using a sharp pin or wire to which solder will not adhere (iron wire). When heating the pins, use a fine tip soldering iron or a hot air desoldering machine. (Fig. S-1-4)

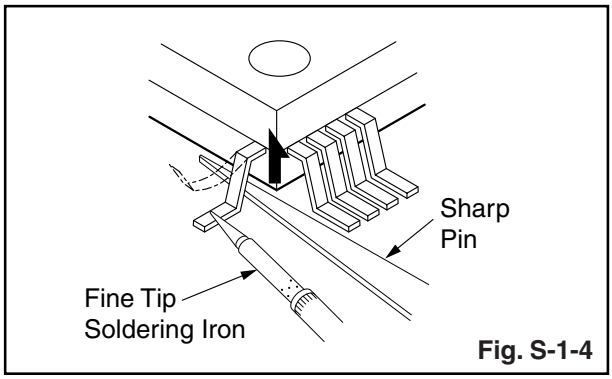

Fig. S-1-4

3. Bottom of the flat pack-IC is fixed with glue to the CBA; when removing entire flat pack-IC, first apply soldering iron to center of the flat pack-IC and heat up. Then remove (glue will be melted). (Fig. S-1-6)
4. Release the flat pack-IC from the CBA using tweezers. (Fig. S-1-6)

With Iron Wire:

1. Using desoldering braid, remove the solder from all pins of the flat pack-IC. When you use solder flux which is applied to all pins of the flat pack-IC, you can remove it easily. (Fig. S-1-3)
2. Affix the wire to a workbench or solid mounting point, as shown in Fig. S-1-5.
3. While heating the pins using a fine tip soldering iron or hot air blower, pull up the wire as the solder melts so as to lift the IC leads from the CBA contact pads as shown in Fig. S-1-5.
4. Bottom of the flat pack-IC is fixed with glue to the CBA; when removing entire flat pack-IC, first apply soldering iron to center of the flat pack-IC and heat up. Then remove (glue will be melted). (Fig. S-1-6)
5. Release the flat pack-IC from the CBA using tweezers. (Fig. S-1-6)

Note: When using a soldering iron, care must be taken to ensure that the flat pack-IC is not being held by glue. When the flat pack-IC is removed from the CBA, handle it gently because it may be damaged if force is applied.

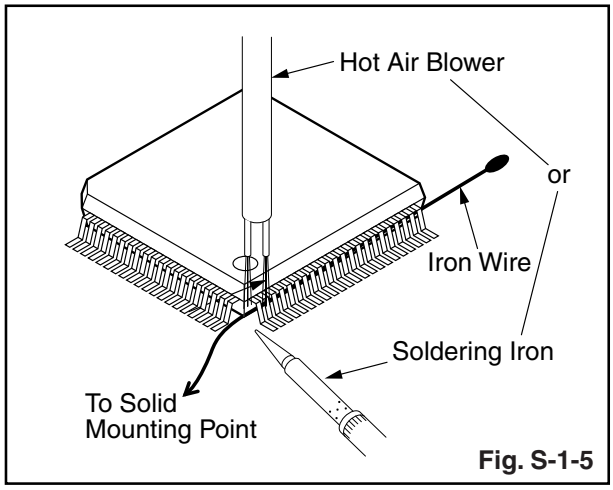

Fig. S-1-5

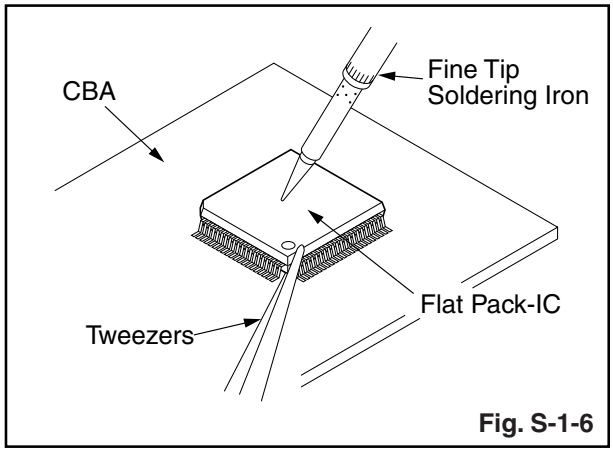

Fig. S-1-6

2. Installation

1. Using desoldering braid, remove the solder from the foil of each pin of the flat pack-IC on the CBA so you can install a replacement flat pack-IC more easily.
2. The "●" mark on the flat pack-IC indicates pin 1. (See Fig. S-1-7.) Be sure this mark matches the 1 on the PCB when positioning for installation. Then presolder the four corners of the flat pack-IC. (See Fig. S-1-8.)
3. Solder all pins of the flat pack-IC. Be sure that none of the pins have solder bridges.

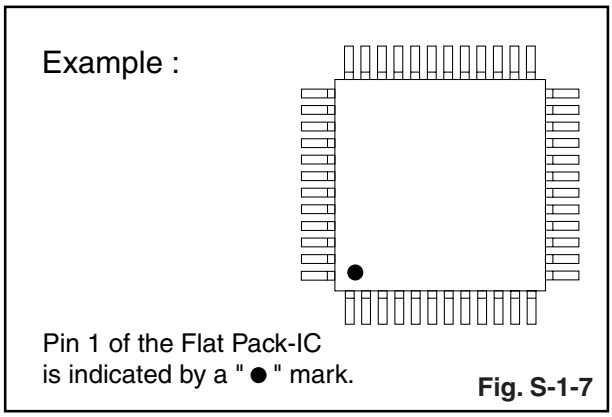

Fig. S-1-7

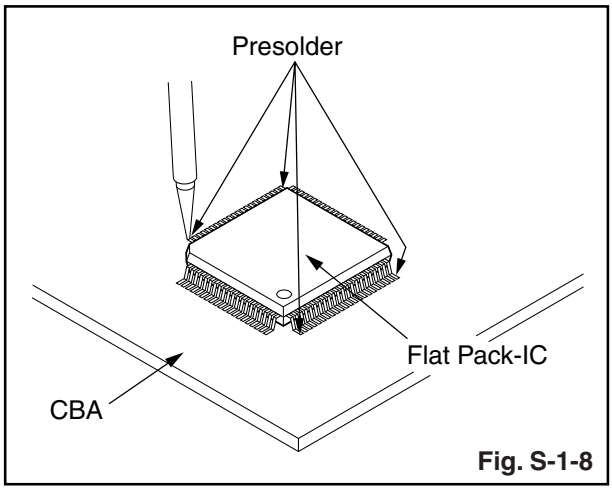

Fig. S-1-8

Instructions for Handling Semi-conductors

Electrostatic breakdown of the semi-conductors may occur due to a potential difference caused by electrostatic charge during unpacking or repair work.

1. Ground for Human Body

Be sure to wear a grounding band (1 MΩ) that is properly grounded to remove any static electricity that may be charged on the body.

2. Ground for Workbench

Be sure to place a conductive sheet or copper plate with proper grounding (1 MΩ) on the workbench or other surface, where the semi-conductors are to be placed. Because the static electricity charge on clothing will not escape through the body grounding band, be careful to avoid contacting semi-conductors with your clothing.

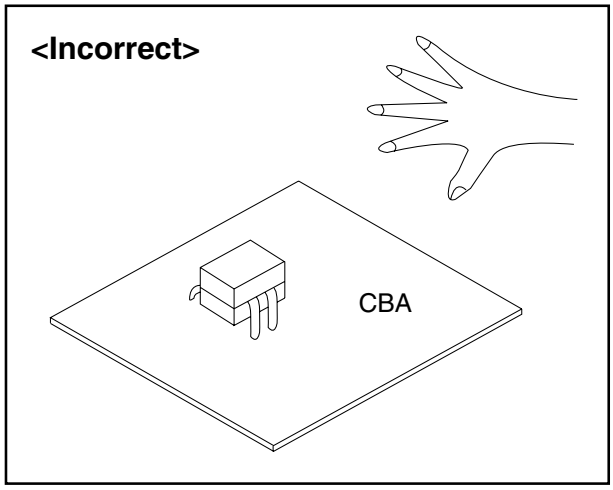

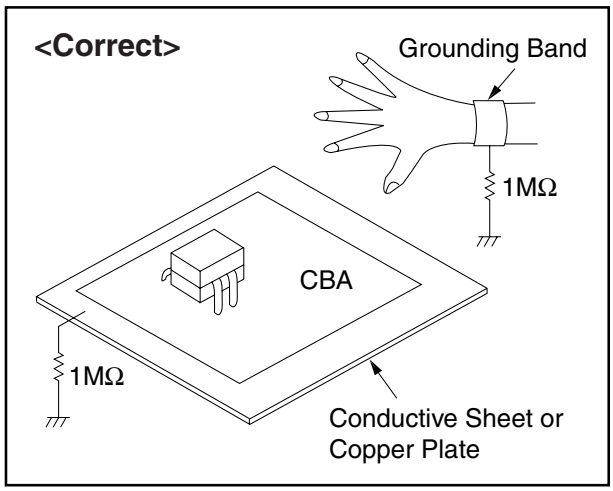

CABINET DISASSEMBLY INSTRUCTIONS

1. Disassembly Flowchart

This flowchart indicates the disassembly steps for the cabinet parts, and the CBA in order to gain access to item(s) to be serviced. When reassembling, follow the steps in reverse order. Bend, route and dress the cables as they were.

CAUTION!

When removing the CRT, be sure to discharge the Anode Lead of the CRT with the CRT Ground Wire before removing the Anode Cap.

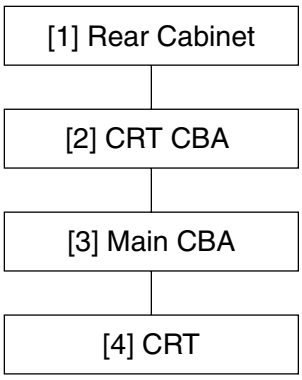

2. Disassembly Method

Step/ Loc. No.	Part	Removal		
		Fig. No.	Remove/*Unhook/ Unlock/Release/ Unplug/Unclamp/ Desolder	Note
[1]	Rear Cabinet	D1 D2	7(S-1), (S-2), 2(S-4)	1
[2]	CRT CBA	D4 D5	CN1501	2
[3]	Main CBA	D3 D5	CN571	3
[4]	CRT	D4	4(S-3), Anode Cap	4
↓ (1)	↓ (2)	↓ (3)	↓ (4)	↓ (5)

Note:

(1) Order of steps in procedure. When reassembling, follow the steps in reverse order. These numbers are also used as the Identification (location) No. of parts in figures.

(2) Parts to be removed or installed.

(3) Fig. No. showing procedure of part location

(4) Identification of parts to be removed, unhooked, unlocked, released, unplugged, unclamped, or desoldered.
P = Spring, L = Locking Tab, S = Screw,
CN = Connector
* = Unhook, Unlock, Release, Unplug, or Desolder
e.g. 2(S-2) = two Screws (S-2),
2(L-2) = two Locking Tabs (L-2)

(5) Refer to the following "Reference Notes in the Table."

Reference Notes in the Table

1. Removal of the Rear Cabinet: Remove screws 7(S-1), (S-2) and 2(S-4) then slide the Rear Cabinet backward.
2. Removal of the CRT CBA: Disconnect CN1501 then pull the CRT CBA backward.
3. Removal of the Main CBA: Disconnect CN571 on the Main CBA then slide the Main CBA backward.
4. **CAUTION:** Discharge the Anode Lead of the CRT with the CRT Ground Wire before removing the Anode Cap.
Removal of the CRT: Remove screws 4(S-3) and Anode Cap. then slide the CRT backward.

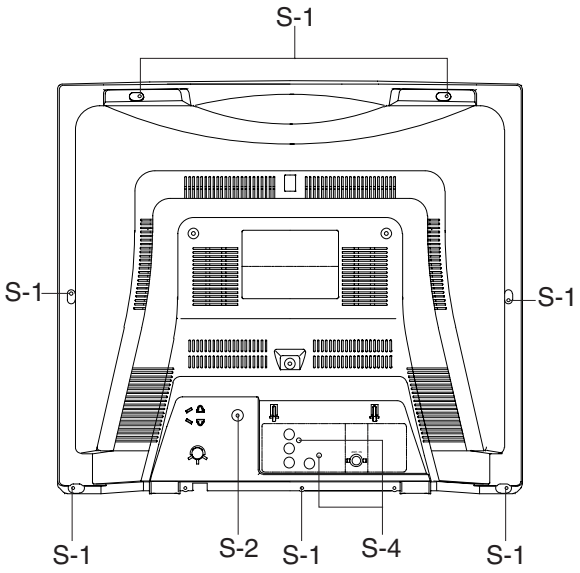

[1] Rear Cabinet

Fig. D1

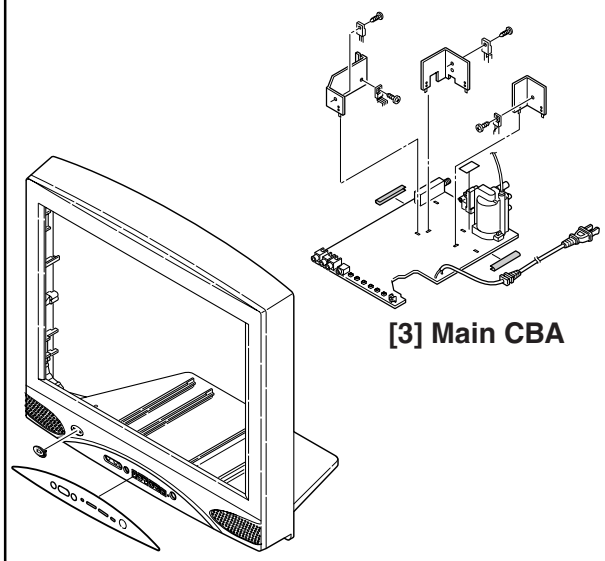

[3] Main CBA

Fig. D3

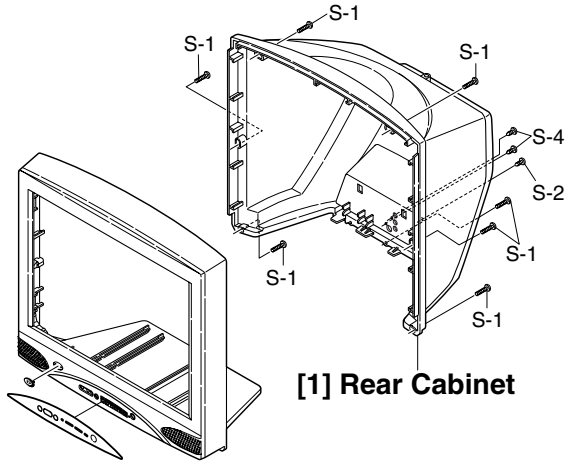

[1] Rear Cabinet

Fig. D2

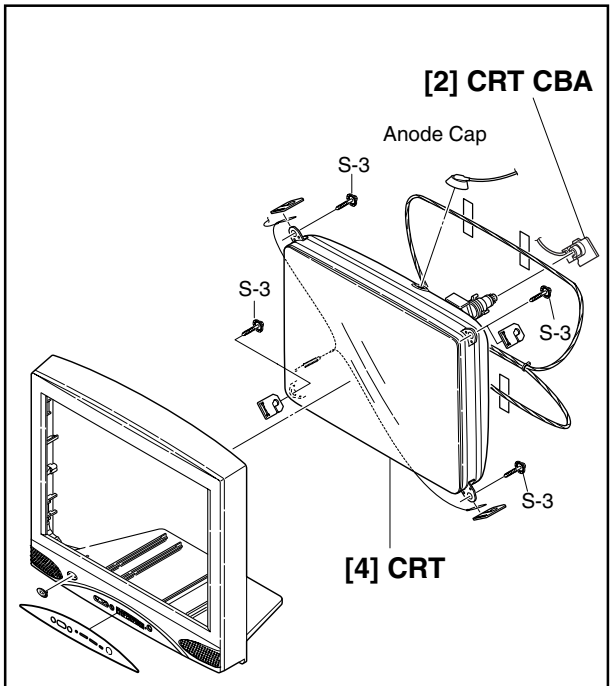

[4] CRT

Fig. D4

TV Cable Wiring Diagram

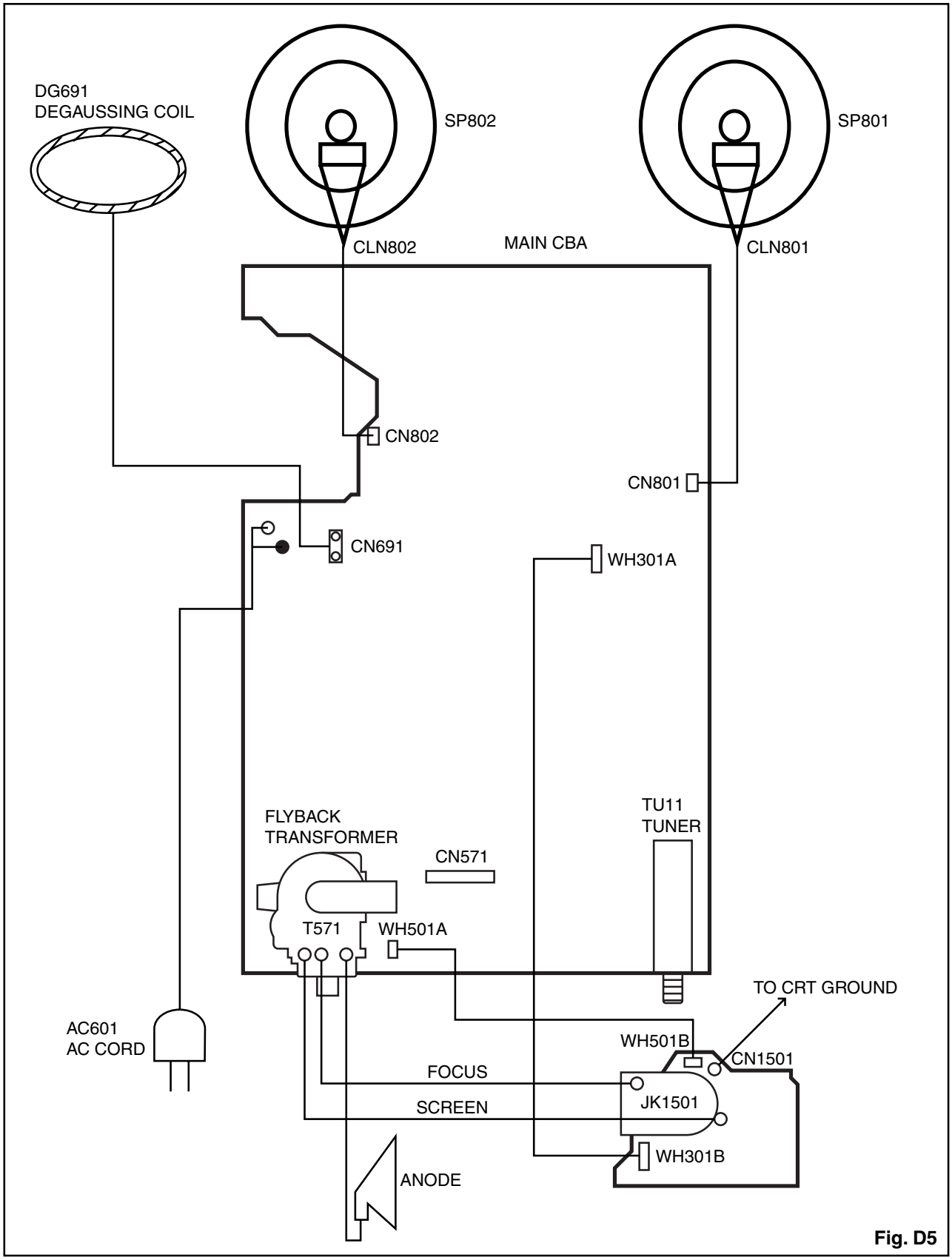

Fig. D5

ELECTRICAL ADJUSTMENT INSTRUCTIONS

General Note: “CBA” is abbreviation for “Circuit Board Assembly.”

Note: Electrical adjustments are required after replacing circuit components and certain mechanical parts. It is important to perform these adjustments only after all repairs and replacements have been completed.
Also, do not attempt these adjustments unless the proper equipment is available.

Test Equipment Required

1. NTSC Pattern Generator (Color Bar W/White Window, Red Color, Dot Pattern, Gray Scale, Monoscope, Multi-Burst)
2. DC Voltmeter
3. Oscilloscope: Dual-trace with 10:1 probe, V-Range: 0.001~50 V/Div, F-Range: DC~AC-60 MHz
4. Plastic Tip Driver
5. Remote control unit: Part No. N0108UD, N0132UD, NE121UD or NE122UD
6. DC power supply 13.2V/5A

How to make Service remote control unit:

1. Prepare normal remote control unit. (Part No. N0108UD, N0132UD, NE121UD or NE122UD) Remove 3 Screws from the back lid. (Fig. 1-1)

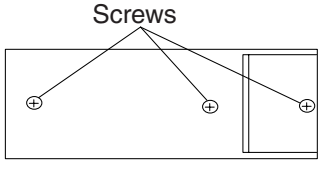

Fig. 1-1

2. Add J1 (Jumper Wire) to the remote control CBA. (Fig. 1-2)

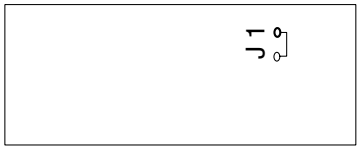

Fig. 1-2

How to enter the service mode:

Service mode:

1. Use the service remote control unit.
2. Turn the power on. (Use main power on the TV unit.)
3. Press [SLEEP] button on the service remote control unit. Version of micro computer will display on the CRT. (Ex: 058-0.06)
4. Check the display on the lower left is “3641” and if it is not “3641,” set it at “3641” according to "Initial Setting" on page 5-2.

1. +B Adjustment

Purpose: To obtain correct operation.

Symptom of Misadjustment: The picture is dark and the unit does not operate correctly.

Test Point	Adj. Point	Mode	Input
TP601(+B) TP300(GND)	VR661	---	---
Tape	**M. EQ.**	**Spec.**	
---	DC Voltmeter	+120±0.5 V DC.	

Note: TP601, TP300(GND), VR661 --- Main CBA

1. Connect DC Volt Meter to TP601 and TP300(GND).
2. Adjust VR661 so that the voltage of TP601 becomes +120±0.5 V DC.

2. Initial Setting

General

1. Enter the Service mode. (See page 5-1.)
2. Press [VOL ▼] button on the service remote control unit. Display changes “C/D,” “7F,” “LANGUAGE,” “ACCESS CODE,” “SOUND TYPE,” “VIDEO TONE,” “FM-MODE,” “V-OUT,” “VIDEO,” “AV MEMO,” “STABLE SOUND,” “FILTER,” “500,” “YUV MEMORY,” “NO SIG BRT,” “A-MUTE POL,” and “V-MENU” cyclically when [VOL ▼] button is pressed.
3. To set the following each data value, press [CH ▲ / ▼] buttons on the service remote control unit.

   7F --- Set to “FF.”

   LANGUAGE --- Set to “SPA/FRA.”

   ACCESS CODE --- Set to “ON.”

   SOUND TYPE --- Set to “MTS.”

   VIDEO TONE --- Set to “ON.”

   FM-MODE --- Set to “OFF.”

   V-OUT --- Set to “OFF.”

   VIDEO --- Set to “V1/V2.”

   AV MEMO --- Set to “OFF.”

   STABLE SOUND --- Set to “OFF.”

   FILTER --- Set to “OFF.”

   Adjusting the monitoring time --- Set to “500.”

   YUV MEMORY --- Set to “OFF.”

   NO SIG BRT --- Set to “0.”

   A-MUTE POL --- Set to “H.”

   V-MENU --- Set to “OFF.”

3. Setting for BRIGHT, CONTRAST, COLOR, S-COLOR, TINT, V-TINT, S-TINT, SHARP, and S-SHARP Data Values

General

1. Enter the Service mode. (See page 5-1.)
2. Press [MENU] button on the service remote control unit. Display changes "BRT," "CNT," "CLR," "S-CLR," "TNT," "V-TNT," "S-TNT," "SHARP," and "S-SHARP" cyclically when [MENU] button is pressed.

CNT

1. Press [MENU] button on the service remote control unit. Then select “CONTRAST” (CNT) display.
2. Press [CH ▲ / ▼] buttons on the service remote control unit so that the value of “CONTRAST” (CNT) becomes 84.

CLR

1. Press [MENU] button on the service remote control unit. Then select “COLOR” (CLR) display.
2. Press [CH ▲ / ▼] buttons on the service remote control unit so that the value of “COLOR” (CLR) becomes 56.

S-CLR

1. Press [MENU] button on the service remote control unit. Then select “S-COLOR” (S-CLR) display.
2. Press [CH ▲ / ▼] buttons on the service remote control unit so that the value of “S-COLOR” (S-CLR) becomes 56.

TNT

1. Press [MENU] button on the service remote control unit. Then select “TINT” (TNT) display.
2. Press [CH ▲ / ▼] buttons on the service remote control unit so that the value of “TINT” (TNT) becomes 58.

V-TNT

1. Press [MENU] button on the service remote control unit. Then select “V-TINT” (V-TNT) display.
2. Press [CH ▲ / ▼] buttons on the service remote control unit so that the value of “V-TINT” (V-TNT) becomes 59.

S-TINT

1. Press [MENU] button on the service remote control unit. Then select “S-TINT” (S-TNT) display.
2. Press [CH ▲ / ▼] buttons on the service remote control unit so that the value of "S-TINT" (S-TNT) becomes 59.

SHARP

1. Press [MENU] button on the service remote control unit. Then select “SHARP” (SHARP) display.
2. Press [CH ▲ / ▼] buttons on the service remote control unit and select “47.”

S-SHARP

1. Press [MENU] button on the service remote control unit. Then select “S-SHARP” (S-SRP) display.
2. Press [CH ▲ / ▼] buttons on the service remote control unit and select “42.”

Note: **BRIGHT** data value does not need to be adjusted at this moment.

4. H f_0 Adjustment

Purpose: To get correct horizontal frequency.

Note: Use service remote control unit.

1. Press [2] button on the service remote control unit and select H-ADJ mode. (By pressing [2] button the display will change from TV AGC to H-ADJ.)
2. Press [CH ▲ / ▼] buttons on the service remote control unit so that display will change “0” ~ “7”. At this moment, Choose “4”.
3. Turn the power off and on again. (Main Power button on the TV unit.)

5. Black Stretch Control Adjustment

Purpose: To show the fine black color.

Symptom of Misadjustment: Black color will not appear correctly.

Note: Use service remote control unit.

1. Enter the Service mode. (See page 5-1.)
2. Press [6] button on the service remote control unit. “B-S” is indicated.
3. Press [CH ▲ / ▼] buttons on the service remote control unit so that display will change “OFF,” “0,” and “1.” Then choose “B-S OFF.”
4. Press [6] button on the service remote control unit. “B-S2” is indicated.
5. Press [CH ▲ / ▼] buttons on the service remote control unit so that display will change “0” and “1.” Then choose “B-S2 0.”
6. Turn the power off and on again, using the main power button on the TV unit.

6. Purity Check

1. Enter the Service mode. (See page 5-1.)
2. Press [7] button on the remote control unit. Each time pressing [7] button on the service remote control unit, display changes Red mode, Green mode, Blue mode, and White mode cyclically.
3. Select White mode.
4. Turn the power off and on again. (Main power button on the TV unit.)

7. SD Check Mode

1. Enter the Service mode. (See page 5-1.)
2. Press [1] button on the remote control unit. The unit enter the SD-Check mode.
3. The unit starts selecting the added channel from first channel according to the memorized CH ADD/ DELL data and CATV/TV data in RAM.

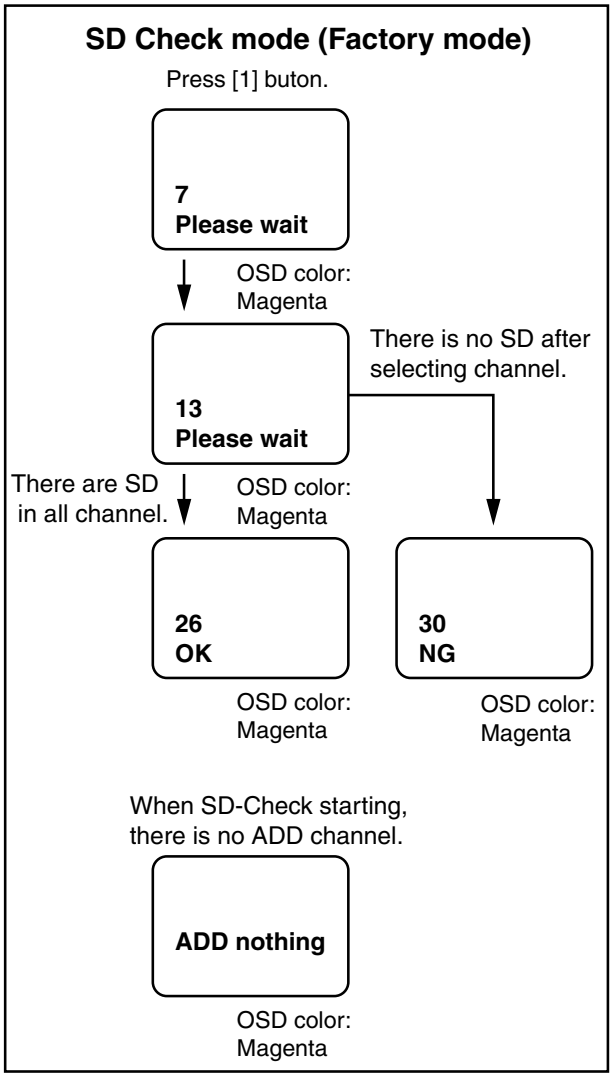

8. H. Position Adjustment

Purpose: To obtain correct horizontal position of screen image.

Symptom of Misadjustment: If H. Position is incorrect, horizontal position of image on the screen may not be properly displayed.

Test Point	Adj. Point	Mode	Input
---	[CH ▲ / ▼] buttons	RF	Monoscope
Tape	**M. EQ.**	**Spec.**	
---	Monoscope	90±5%	

Note: Use service remote control unit

1. Operate the unit for at least 20 minutes.
2. Enter the Service mode. (See page 5-1.)
3. Receive the monoscope pattern.
4. Press [8] button on the remote control unit. “H-P” is indicated.
5. Press [CH ▲ / ▼] buttons on the service remote control unit so that the monoscope pattern will be 90±5% of display size and the circle is round.
6. Turn the power off and on again. (Main power button on the TV unit.)

9. V. Size Adjustment

Purpose: To obtain correct vertical width of screen image.

Symptom of Misadjustment: If V. Size is incorrect, vertical size of image on the screen may not be properly displayed.

Test Point	Adj. Point	Mode	Input
---	[CH ▲ / ▼] buttons	RF	Monoscope
Tape	**M. EQ.**	**Spec.**	
---	Monoscope	90±5%	

Note: Use service remote control unit.

1. Operate the unit for at least 20 minutes.
2. Enter the Service mode. (See page 5-1.)
3. Receive the monoscope pattern.
4. Press [9] button on the service remote control unit and select “V-S” mode. (Display changes “V-S” and “V-P” cyclically when [9] button is pressed).
5. Press [CH ▲ / ▼] buttons on the service remote control unit so that the monoscope pattern will be 90±5% of display size and the circle is round.
6. Turn the power off and on again. (Main power button on the TV unit.)

10. V. Position Adjustment

Purpose: To obtain correct vertical width of screen image.

Symptom of misadjustment: If V. Position is incorrect, vertical height of image on the screen may not be properly displayed.

Test Point	Adj. Point	Mode	Input
---	[CH ▲ / ▼] buttons	RF	Monoscope
Tape	**M. EQ.**	**Spec.**	
---	Monoscope	See below.	

Note: Use service remote control unit

1. Operate the unit for at least 20 minutes.
2. Enter the Service mode. (See page 5-1.)
3. Receive the monoscope pattern.
4. Press [9] button on the service remote control unit and select “V-P” mode. (Display change “V-S” and “V-P” cyclically when [9] button is pressed).
5. Press [CH ▲ / ▼] buttons on the service remote control unit so that the top and bottom of the monoscope pattern will be equal of each other.
6. Turn the power off and on again. (Main power button on the TV unit.)

11. Software Reset

To reset software, press [5] button on the remote control unit for at least 5 seconds after pressing [CH RETURN] button on the remote control unit.

12. H. Size Adjustment

Purpose: To obtain correct horizontal size of screen image.

Symptom of Misadjustment: If H. Size is incorrect, horizontal size of image on the screen may not be properly displayed.

Test Point	Adj. Point	Mode	Input
---	VR562	RF	Monoscope
Tape	**M. EQ.**	**Spec.**	
---	Monoscope	90±5%	

Note: Use service remote control unit

1. Operate the unit for at least 20 minutes.
2. Receive the Monoscope Pattern.
3. Adjust VR562 so that the monoscope pattern will be 90±5% of display size and circle is round.
4. Turn the power off and on again. (Main power button on the TV unit.)

13. PIN Cushion Adjustment

Purpose: To obtain correct straight vertical line of screen image.

Symptom of Misadjustment: If H.Pin cushion is incorrect, vertical line of image on the screen may not be properly displayed.

Test Point	Adj. Point	Mode	Input
---	VR561	RF	Cross hatch
Tape	**M. EQ.**	**Spec.**	
---	Cross hatch	---	

Note: Use service remote control unit

1. Operate the unit for at least 20 minutes.
2. Receive the Cross hatch Pattern.
3. Adjust VR561 so that the cross hatch pattern will be straight line of display.
4. Turn the power off and on again. (Main power button on the TV unit.)

14. Cut-off Adjustment

Purpose: To adjust the beam current of R, G, B, and screen voltage.

Symptom of Misadjustment: White color may be reddish, greenish or bluish.

Test Point	Adj. Point	Mode	Input
---	Screen-Control [CH ▲ / ▼] buttons	RF	Black Raster
Tape	**M. EQ.**	**Spec.**	
---	Pattern Generator	See Reference Notes below.	

Figure

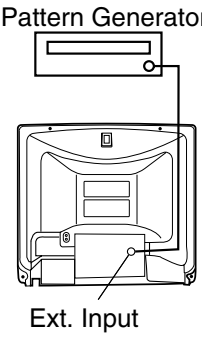

Fig. 2

Note: Screen Control FBT --- Main CBA
FBT = Fly Back Transformer
Use service remote control unit

1. Degauss the CRT and allow CRT to operate for 20 minutes before starting the alignment.
2. Input the Black Raster Signal from RF Input.
3. Enter the Service mode. (See page 5-1.)
4. Press [VOL ▼] button on the service remote control unit and select “C/D” mode. (Display changes “C/D,” “7F,” “LANGUAGE,” “ACCESS CODE,” “SOUND TYPE,” “VIDEO TONE,” “FM-MODE,” “V-OUT,” “VIDEO,” “AV MEMO,” “STABLE SOUND,” “FILTER,” “500,” “YUV MEMORY,” “NO SIG BRT,” “A-MUTE POL,” and “V-MENU” cyclically when [VOL ▼] button is pressed.) then press “1.” The display will momentarily show “CUT OFF R” (R= Red). Now there should be a horizontal line across the center of the picture tube. If needed gradually turn the screen control on the flyback, clockwise until the horizontal line appears. Adjust the Red Cut off by pressing [CH ▲ / ▼] buttons. Proceed to Step 5 when the Red Cut off adjustment is done.
5. Press [2] button. The display will momentarily show “CUT OFF G” (G = Green). Adjust the Green Cut off by pressing [CH ▲ / ▼] buttons. Proceed to step 6 when the Green Cut off adjustment is done.
6. Press [3] button. The display will momentarily show “CUT OFF B” (B = Blue). Adjust the Blue cut off by pressing [CH ▲ / ▼] buttons. When done with steps 4, 5 and 6 the horizontal line should be pure white if not, then attempt the Cut off adjustment again.

15. White Balance Adjustment

Purpose: To mix red, green and blue beams correctly for pure white.

Symptom of Misadjustment: White becomes bluish or reddish.

Test Point	Adj. Point	Mode	Input
Screen	[CH ▲ / ▼] buttons	RF	White Raster (APL 100%)
Tape	**M. EQ.**	**Spec.**	
---	Pattern Generator, Color analyzer	See below	
Figure			

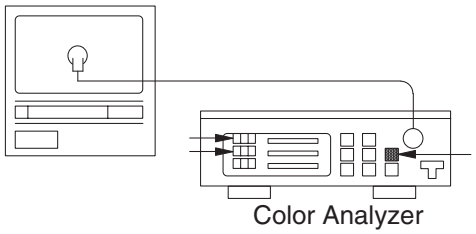

Fig. 3

Note: Use service remote control unit

1. Operate the unit more than 20 minutes.
2. Face the unit to east. Degauss the CRT using Degaussing Coil.
3. Input the White Raster (APL 100%).
4. Set the color analyzer to the CHROMA mode and after zero point calibration, bring the optical receptor to the center on the tube surface (CRT).
5. Enter the Service mode. (See page 5-1.) Press [VOL ▼] button on the service remote control unit and select “C/D” mode. (Display changes “C/D,” “7F,” “LANGUAGE,” “ACCESS CODE,” “SOUND TYPE,” “VIDEO TONE,” “FM-MODE,” “V-OUT,” “VIDEO,” “AV MEMO,” “STABLE SOUND,” “FILTER,” “500,” “YUV MEMORY,” “NO SIG BRT,” “A-MUTE POL,” and “V-MENU” cyclically when [VOL ▼] button is pressed.) then Press [8] button on the service remote control Unit.
6. Press [4] button on the service remote control unit for Red adjustment. Press [5] button on the service remote control unit for Blue adjustment.
7. In each color mode, Press [CH ▲ / ▼] buttons to adjust the values of color.
8. Adjusting Red and Blue color so that the temperature becomes 9200K (x: 286 / y: 294)±3%.
9. At this time, Re-check that Horizontal line is white. If not, Re-adjust Cut-off Adjustment until the Horizontal Line becomes pure white.
10. Turn off and on again to return to normal mode. Receive APL 100% white signal and Check Chroma temperatures become 9200K (x: 286 / y: 294)±3%.

Note: Confirm that Cut Off Adj. is correct after this adjustment, and attempt Cut Off Adj. if needed.

16. Sub-Brightness Adjustment

Purpose: To get proper brightness.

Symptom of Misadjustment: If Sub-Brightness is incorrect, proper brightness cannot be obtained by adjusting the Brightness Control.

Test Point	Adj. Point	Mode	Input
---	[CH ▲ / ▼] buttons	RF	IQW
Tape	**M. EQ.**	**Spec.**	
---	Pattern Generator	See below	
Figure			

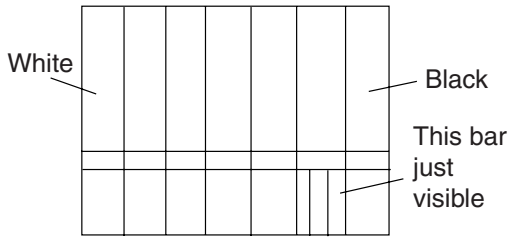

Fig. 4

Note: IQW Setup level --- 7.5 IRE
Use service remote control unit

1. Enter the Service mode. (See page 5-1.) Then input IQW signal from RF Input.
2. Press [MENU] button on the service remote control unit and Select “BRT” mode. (Display changes "BRT," "CNT," "CLR," "S-CLR," "TNT," "V-TNT," "S-TNT," "SHARP," and "S-SHARP" cyclically when [MENU] button is pressed). Press [CH ▲ / ▼] buttons so that the bar is just visible (See above figure).
3. Turn the power off and on again. (Main power button on the TV unit.)

17. Focus Adjustment

Purpose: Set the optimum Focus.

Symptom of Misadjustment: If Focus Adjustment is incorrect, blurred images are shown on the display.

Test Point	Adj. Point	Mode	Input
---	Focus Control	---	Monoscope
Tape	**M. EQ.**	**Spec.**	
---	Pattern Generator	See below	

Note: Focus VR (FBT) --- Main CBA,
FBT = Fly Back Transformer

1. Operate the unit more than 30 minutes.
2. Face the unit to the East and Degauss the CRT using Degaussing Coil.
3. Input the Monoscope Pattern.
4. Adjust the Focus Control on the FBT to obtain clear picture.

The following adjustments normally are not attempted in the field. Only when replacing the CRT then adjust as a preparation.

18. Purity Adjustment

Purpose: To obtain pure color.

Symptom of Misadjustment: If Color Purity Adjustment is incorrect, large areas of color may not be properly displayed.

Test Point	Adj. Point	Mode	Input
---	Deflection Yoke Purity Magnet	---	Red Color
Tape	**M. EQ.**	**Spec.**	
---	Pattern Generator	See below	
Figure			

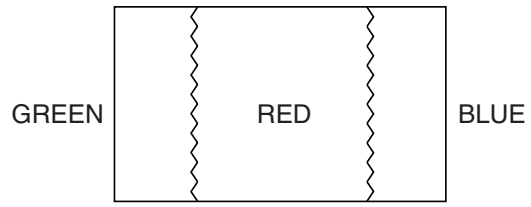

Fig. 5

1. Set the unit facing east.
2. Operate the unit for over 30 minutes before adjusting.
3. Fully degauss the unit using an external degaussing coil.
4. Loosen the screw on the Deflection Yoke Clamper and pull the Deflection Yoke back away from the screen. (See Fig. 6)
5. Loosen the Ring Lock and adjust the Purity Magnets so that a red field is obtained at the center of the screen. Tighten Ring Lock. (See Fig. 5,6)
6. Slowly push the Deflection Yoke toward bell of CRT and set it where a uniform red field is obtained.
7. Tighten the clamp screw on the Deflection Yoke.

19. Convergence Adjustment

Purpose: To obtain proper convergence of red, green and blue beams.

Symptom of Misadjustment: If Convergence Adjustment is incorrect, the edge of white letters may have color edges.

Test Point	Adj. Point	Mode	Input
---	C.P. Magnet (RB) C.P. Magnet (RB-G) Deflection Yoke	---	Dot Pattern or Crosshatch
Tape	**M. EQ.**	**Spec.**	
---	Pattern Generator	See below	
Figure			

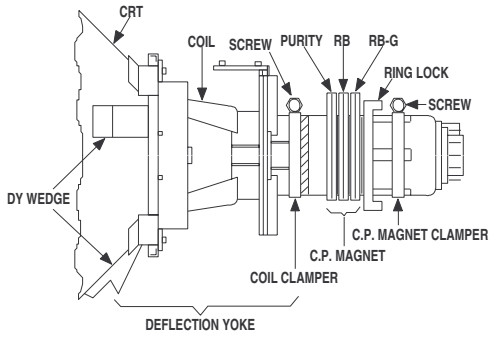

Fig. 6

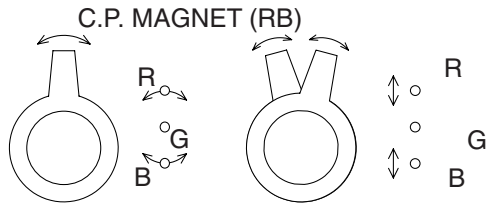

Fig. 7

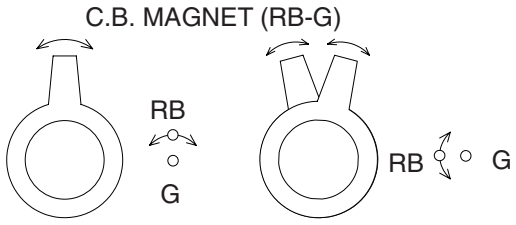

Fig. 8

1. Loosen the Ring Lock and align red with blue dots or Crosshatch at the center of the screen by rotating (RB) C.P. Magnets. (See Fig. 7)
2. Align red / blue with green dots at the center of the screen by rotating (RB-G) C.P. Magnet. (See Fig. 8)
3. Paintlock the C.P. Magnets after adjustment.
4. Remove the DY Wedges and slightly tilt the Deflection Yoke horizontally and vertically to obtain the best overall convergence.
5. Fix the Deflection Yoke by carefully inserting the DY Wedges between CRT and Deflection Yoke.

HOW TO INITIALIZE THE TELEVISION

To put the program back at the factory-default, initialize the television as the following procedure.

1. Use the service remote control unit.
2. Turn the power on. (Use main power on the TV unit.)
3. Press [SLEEP] button on the service remote control unit to enter the Service mode. (Refer to “How to enter the Service mode” on page 5-1.)
4. Press [VOL ▼] button on the service remote control unit twice, and confirm that OSD indication is “7F = FF.” If needed, set it to become “7F = FF” by pressing [CH ▲ / ▼] buttons on the service remote control unit.
5. Confirm that OSD indication on the four corners on TV screen changes from on and off light indication to red by pressing a [DISPLAY] button. (It takes one or two seconds.)
6. Turn the power off by pressing main power button on the TV unit, and unplug the AC cord from the AC outlet.

BLOCK DIAGRAMS

System Control Block Diagram

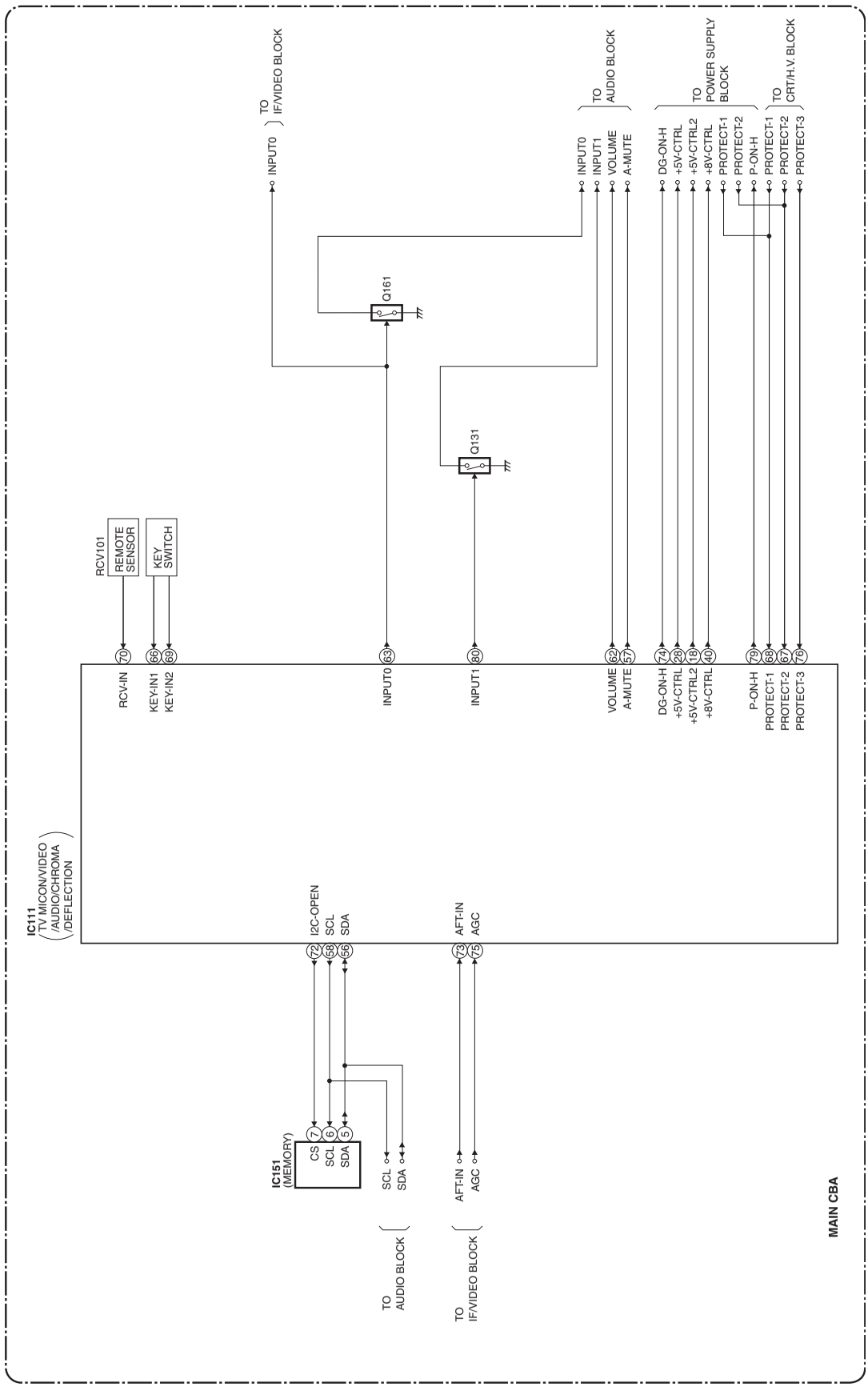

IF/Video Block Diagram

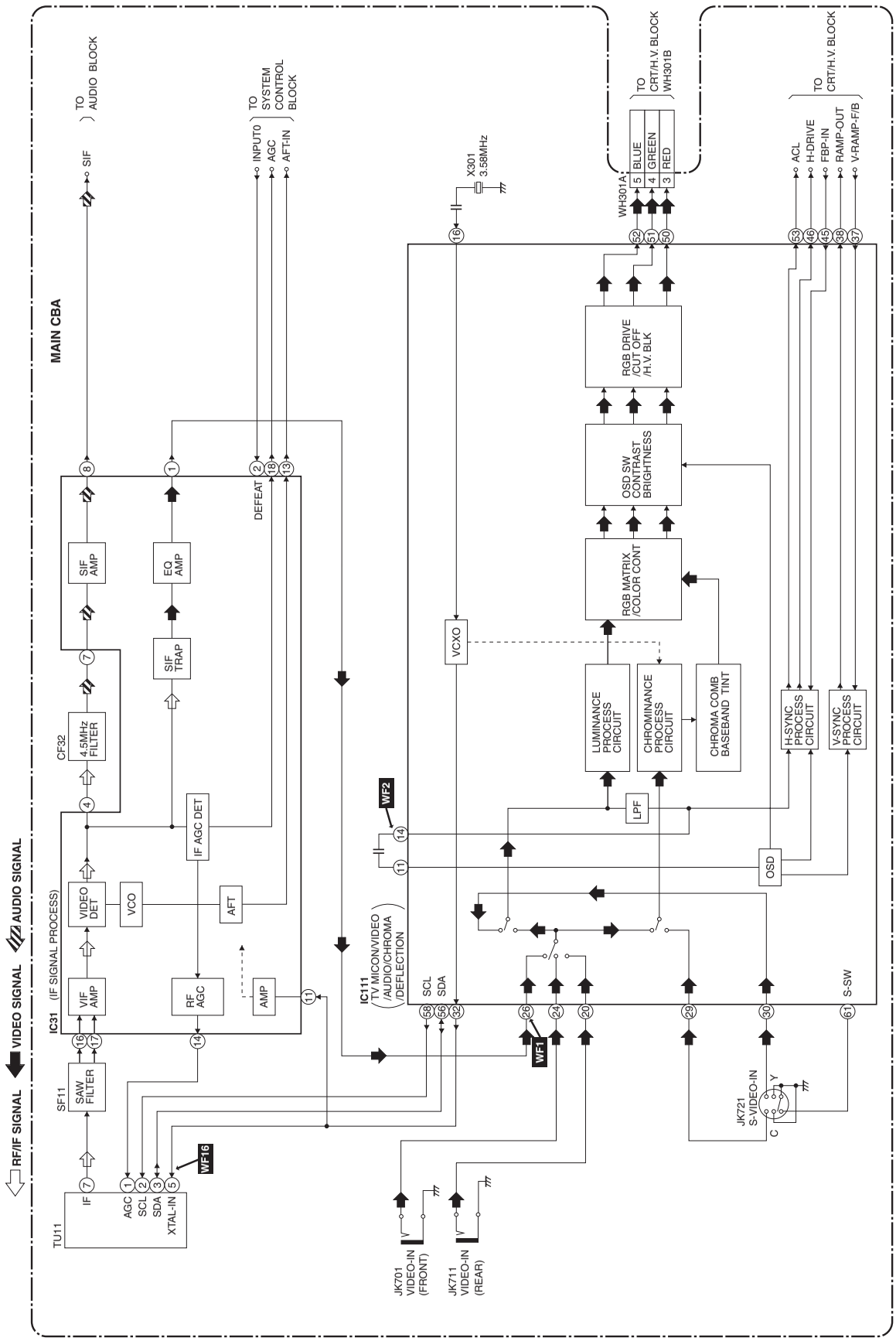

Audio Block Diagram

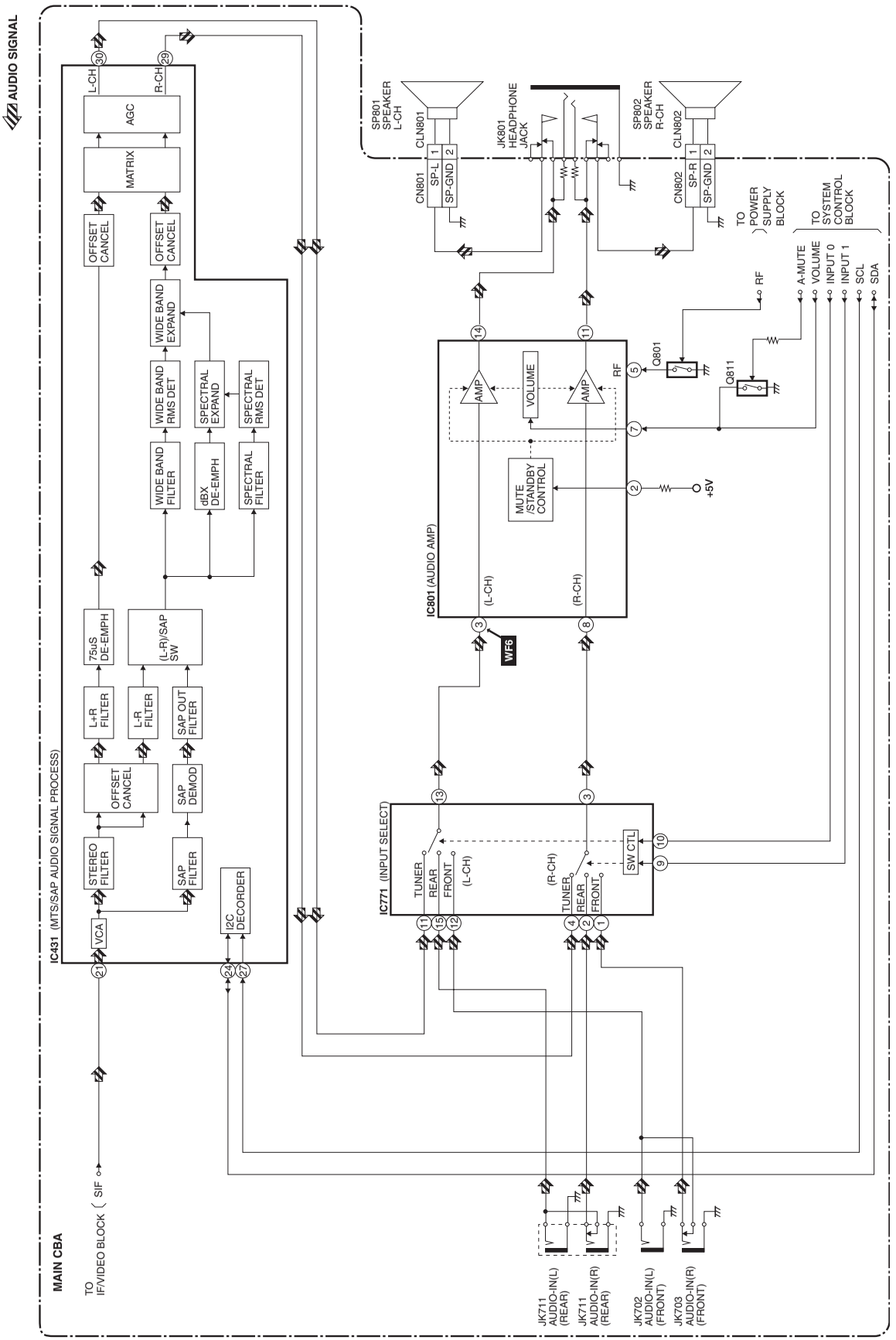

CRT/H.V. Block Diagram

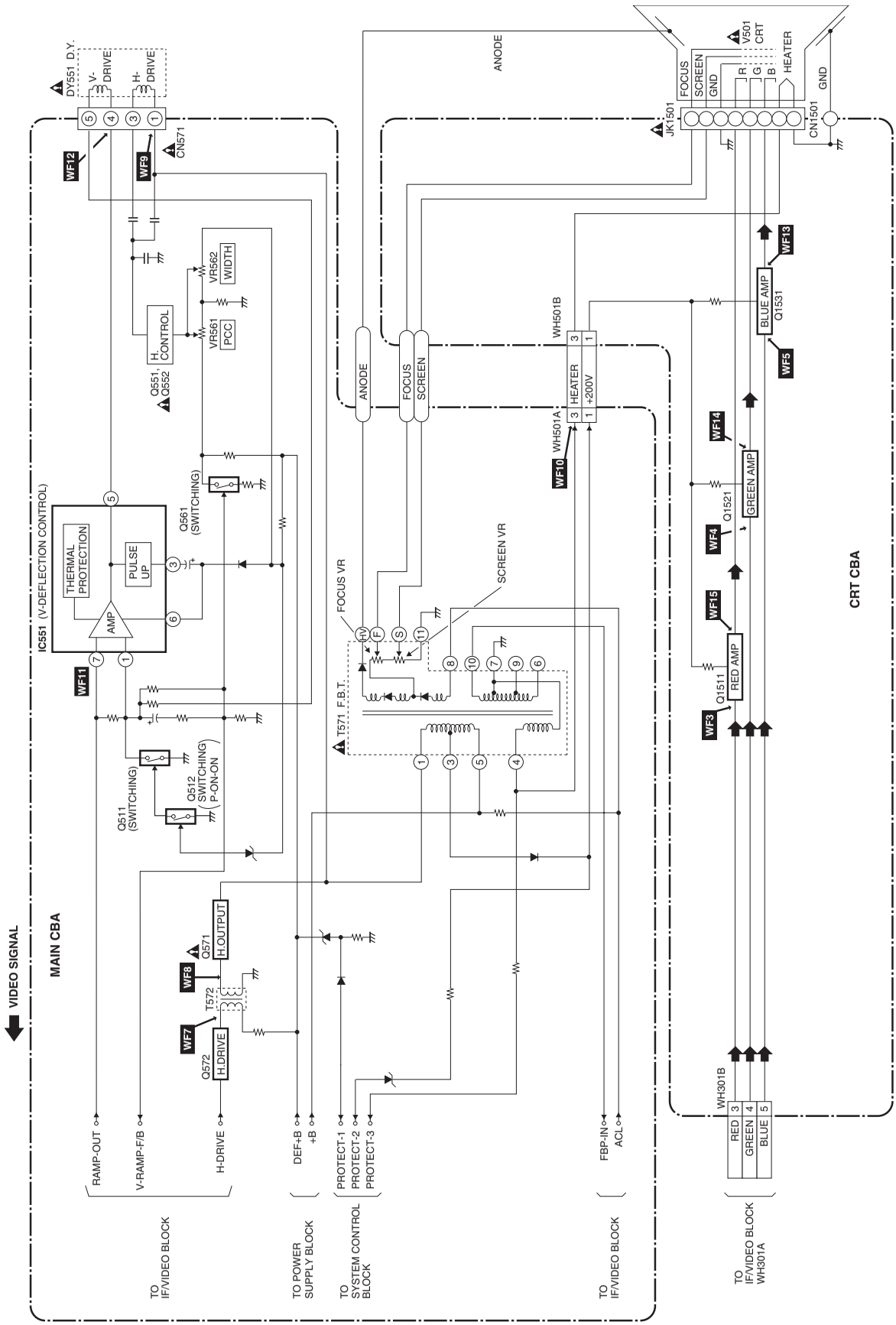

Power Supply Block Diagram

CAUTION !
Fixed voltage (or Auto voltage selectable) power supply circuit is used in this unit.
If Main Fuse (F601) is blown , check to see that all components in the power supply circuit are not defective before you connect the AC plug to the AC power supply.
Otherwise it may cause some components in the power supply circuit to fail.

4A/125V

CAUTION ! : For continued protection against risk of fire, replace only with same type 4 A, 125V fuse.
ATTENTION : Utiliser un fusible de rechange de même type de 4A, 125V.

NOTE:
The voltage for parts in hot circuit is measured using hot GND as a common terminal.

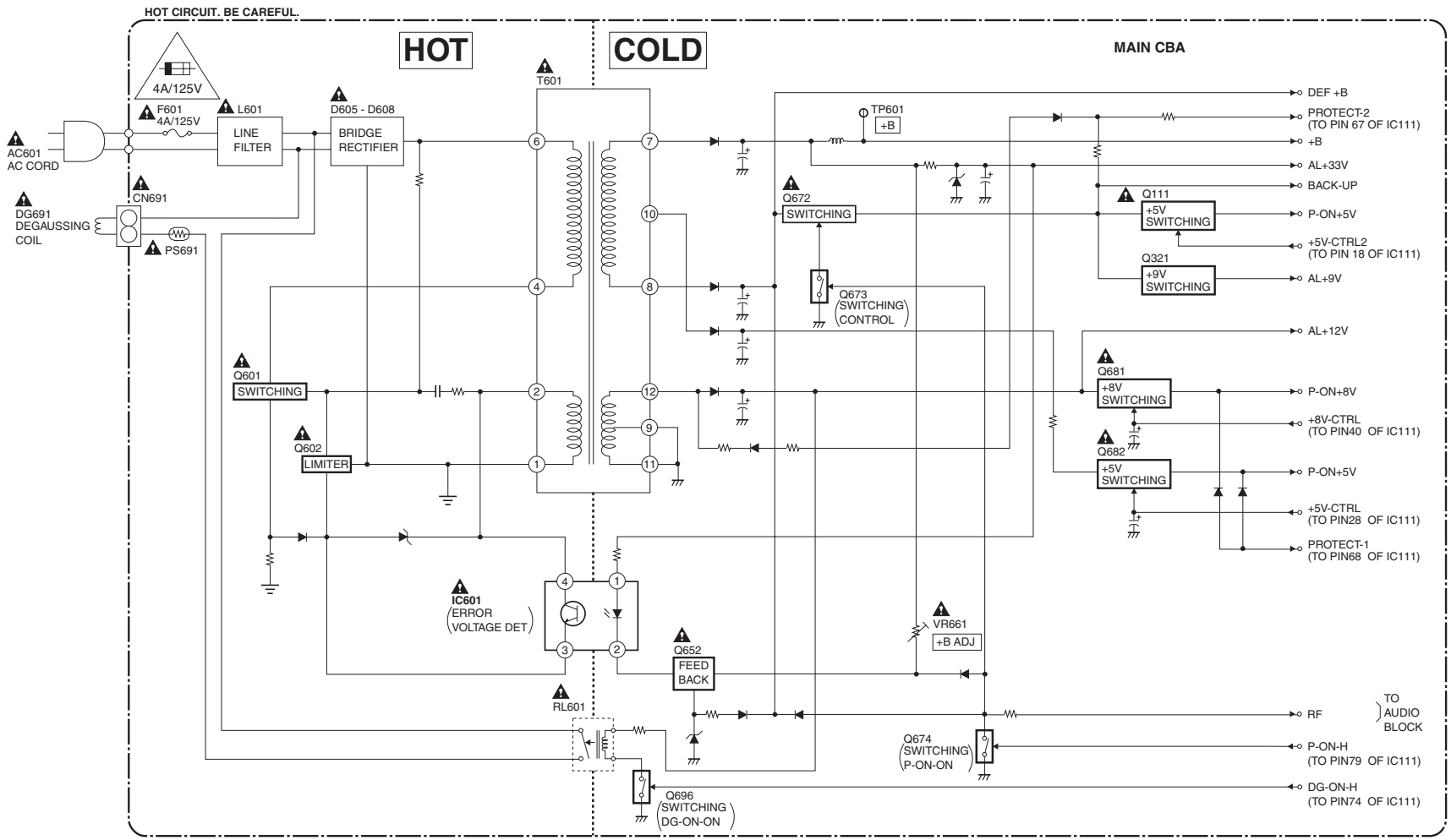

SCHEMATIC DIAGRAMS / CBA'S AND TEST POINTS

Standard Notes

Many electrical and mechanical parts in this chassis have special characteristics. These characteristics often pass unnoticed and the protection afforded by them cannot necessarily be obtained by using replacement components rated for higher voltage, wattage, etc. Replacement parts that have these special safety characteristics are identified in this manual and its supplements; electrical components having such features are identified by the mark "⚠" in the schematic diagram and the parts list. Before replacing any of these components, read the parts list in this manual carefully. The use of substitute replacement parts that do not have the same safety characteristics as specified in the parts list may create shock, fire, or other hazards.

Notes:

1. Do not use the part number shown on these drawings for ordering. The correct part number is shown in the parts list, and may be slightly different or amended since these drawings were prepared.
2. All resistance values are indicated in ohms (K = 10^3, M = 10^6).
3. Resistor wattages are 1/4W or 1/6W unless otherwise specified.
4. All capacitance values are indicated in μF (P = 10^{-6} μF).
5. All voltages are DC voltages unless otherwise specified.

Note of Capacitors:

ML --- Mylar Cap. PP --- Metallized Film Cap. SC --- Semiconductor Cap. L --- Low Leakage type

Temperature Characteristics of Capacitors are noted with the following:

B --- ±10% CH --- 0±60 ppm/°C CSL --- +350~-1000 ppm/°C

Tolerance of Capacitors are noted with the following:

Z --- +80~-20%

Note of Resistors:

CEM --- Cement Res. MTL --- Metal Res. F --- Fuse Res.

Capacitors and transistors are represented by the following symbols.

CBA Symbols

(Top View) (Bottom View)

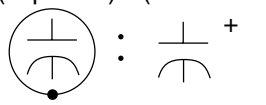

Electrolytic Capacitor

(Bottom View)

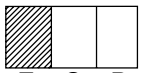

Transistor or Digital Transistor

(Top View)

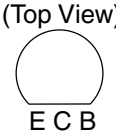

NPN Transistor

(Top View)

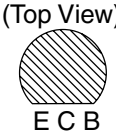

PNP Transistor

(Top View)

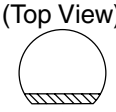

NPN Digital Transistor

(Top View)

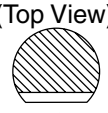

PNP Digital Transistor

Schematic Diagram Symbols

Digital Transistor

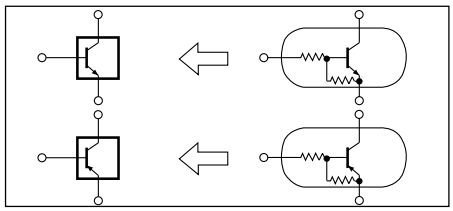

LIST OF CAUTION, NOTES, AND SYMBOLS USED IN THE SCHEMATIC DIAGRAMS ON THE FOLLOWING PAGES:

1. CAUTION:

CAUTION: FOR CONTINUED PROTECTION AGAINST RISK OF FIRE, REPLACE ONLY WITH SAME TYPE_A,_V FUSE.

ATTENTION: UTILISER UN FUSIBLE DE RECHANGE DE MÊME TYPE DE_A,_V.

2. CAUTION:

Fixed Voltage (or Auto voltage selectable) power supply circuit is used in this unit.
If Main Fuse (F601) is blown, first check to see that all components in the power supply circuit are not defective before you connect the AC plug to the AC power supply. Otherwise it may cause some components in the power supply circuit to fail.

3. Note:

1. Do not use the part number shown on the drawings for ordering. The correct part number is shown in the parts list, and may be slightly different or amended since the drawings were prepared.
2. To maintain original function and reliability of repaired units, use only original replacement parts which are listed with their part numbers in the parts list section of the service manual.

4. Voltage indications on the schematics are as shown below:

Plug the TV power cord into a standard AC outlet.:

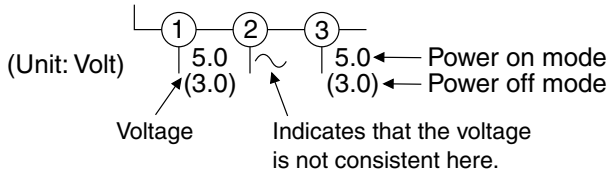

5. How to read converged lines

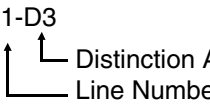

Examples:
1. "1-D3" means that line number "1" goes to the line number "1" of the area "D3".
2. "1-B1" means that line number "1" goes to the line number "1" of the area "B1".

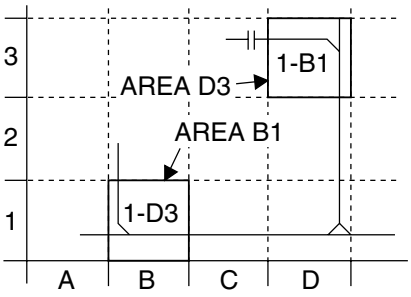

6. Test Point Information

: Indicates a test point with a jumper wire across a hole in the PCB.

: Used to indicate a test point with a component lead on foil side.

: Used to indicate a test point with no test pin.

: Used to indicate a test point with a test pin.

Main 1/4 Schematic Diagram

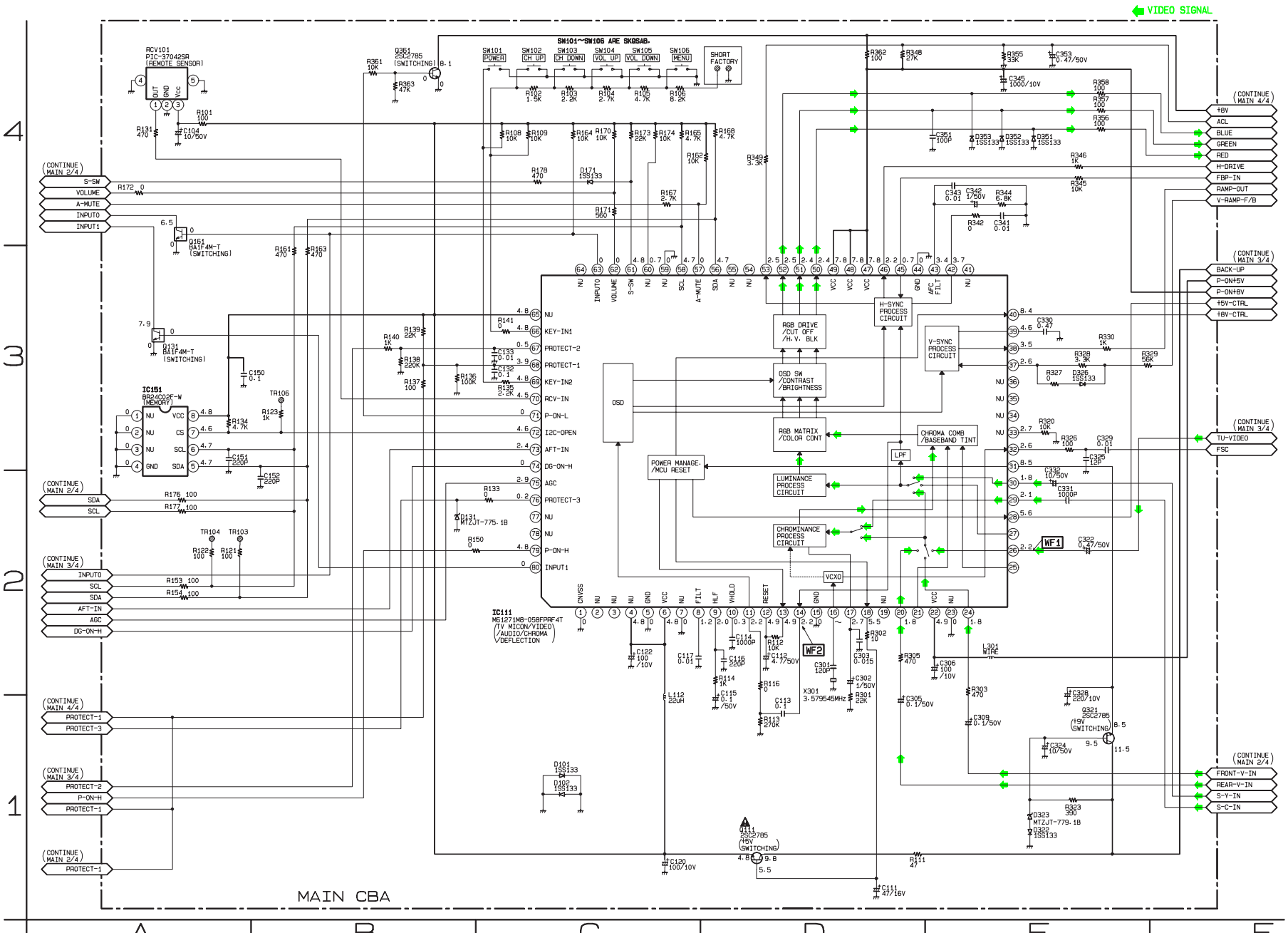

MAIN 1/4

Ref No.	Position
ICS	
IC111	C-2
IC151	A-3
TRANSISTORS	
Q111	D-1
Q131	A-3
Q161	A-4
Q321	E-1
Q361	B-4

Main 2/4 Schematic Diagram

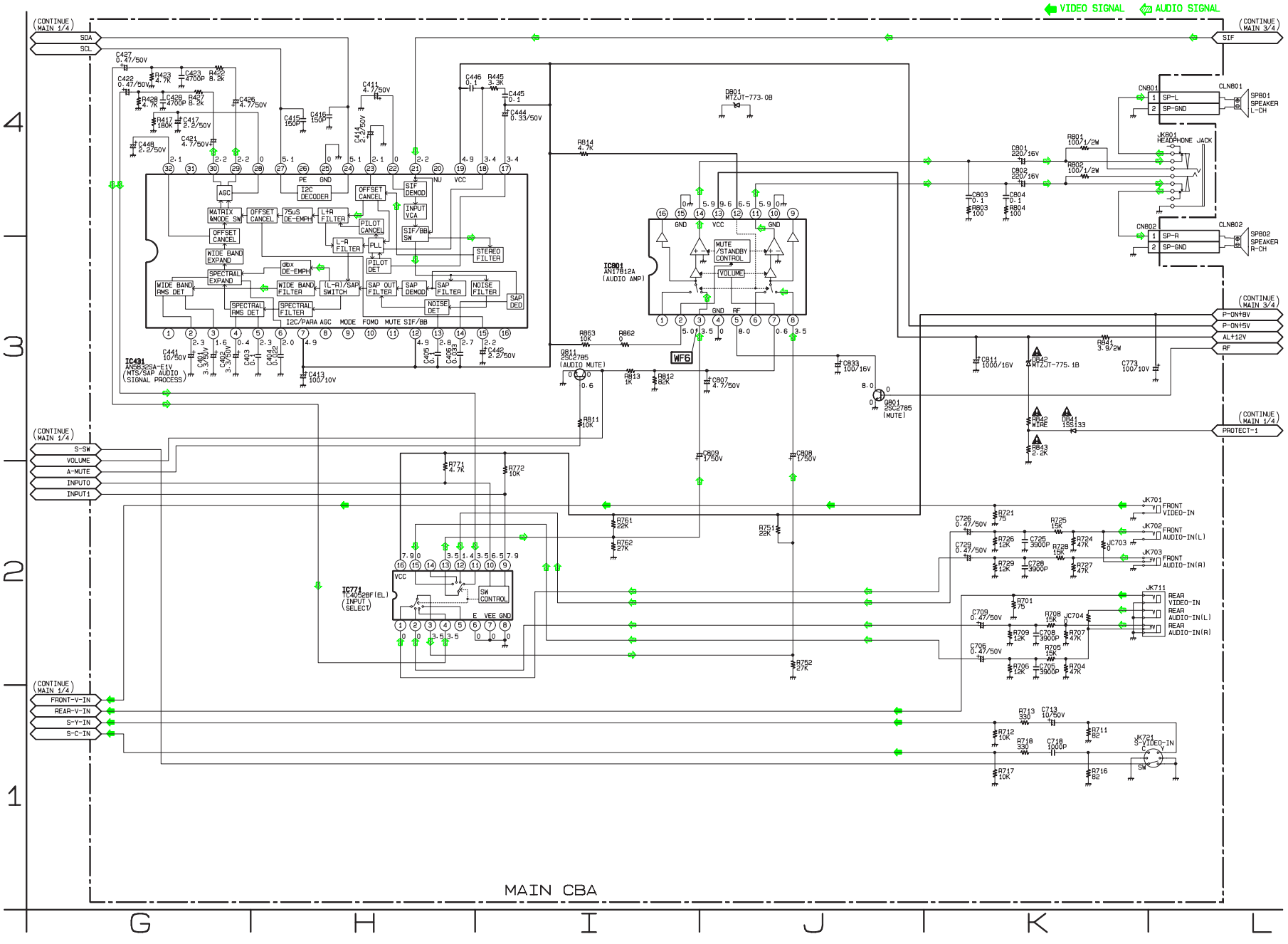

MAIN 2/4

Ref No.	Position
ICS	
IC431	G-3
IC771	H-2
IC801	I-3
TRANSISTORS	
Q801	J-3
Q811	I-3
CONNECTORS	
CN801	K-4
CN802	K-4

Main 3/4 Schematic Diagram

CAUTION !
Fixed voltage (or Auto voltage selectable) power supply circuit is used in this unit.
If Main Fuse (F601) is blown , check to see that all components in the power supply circuit are not defective before you connect the AC plug to the AC power supply.
Otherwise it may cause some components in the power supply circuit to fail.

4A/125V

CAUTION ! : For continued protection against risk of fire, replace only with same type 4 A, 125V fuse.
ATTENTION : Utiliser un fusible de rechange de même type de 4A, 125V.

NOTE:
The voltage for parts in hot circuit is measured using hot GND as a common terminal.

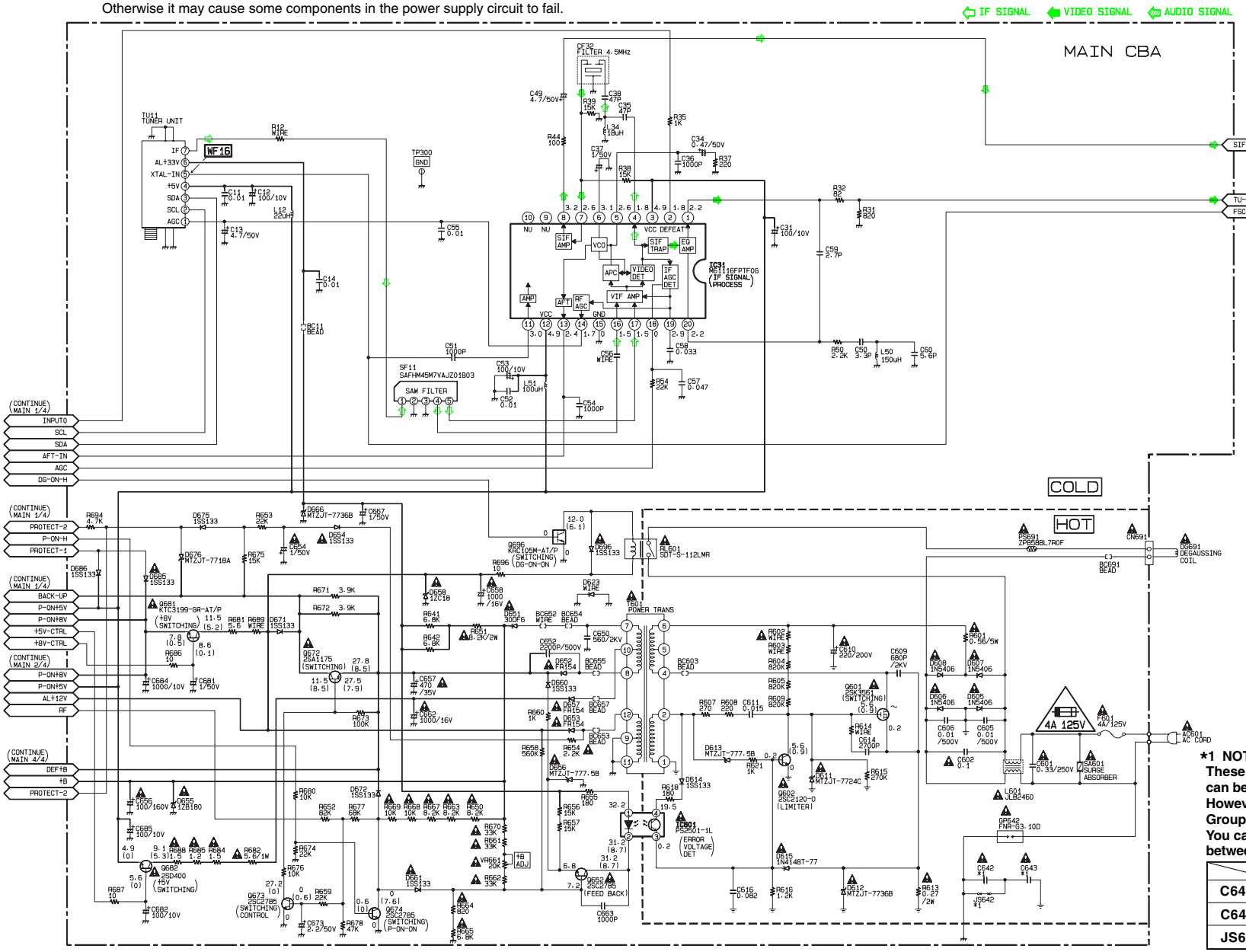

MAIN 3/4

Ref No.	Position
ICS	
IC31	P-3
IC601	O-1
TRANSISTORS	
Q601	P-2
Q602	P-1
Q652	O-1
Q672	N-2
Q673	N-1
Q674	N-1
Q681	M-2
Q682	M-1
Q696	O-2
CONNECTOR	
CN691	Q-2
TEST POINT	
TP300	N-4
VARIABLE RESISTOR	
VR661	O-1

	Group A	Group B
C643	0.01/250V	4700P/250V
C642	0.01/250V	Not Used
JS642	Not Used	WIRE

L3401SCM3

Main 4/4 & CRT Schematic Diagram

MAIN 4/4

Ref No.	Position	Ref No.	Position
IC		CONNECTORS	
IC551	S-3	CN571	T-3
TRANSISTORS		WH301A	V-2
Q511	S-2	WH501A	V-3
Q512	S-2	TEST POINT	
Q551	T-3	TP601	U-2
Q552	T-3	VARIABLE RESISTORS	
Q561	U-3	VR561	U-3
Q571	U-2	VR562	U-3
Q572	T-2		

CRT

Ref No.	Position
TRANSISTORS	
Q1511	W-1
Q1521	W-1
Q1531	X-1
CONNECTORS	
CN1501	X-2
WH301B	V-2
WH501B	V-3

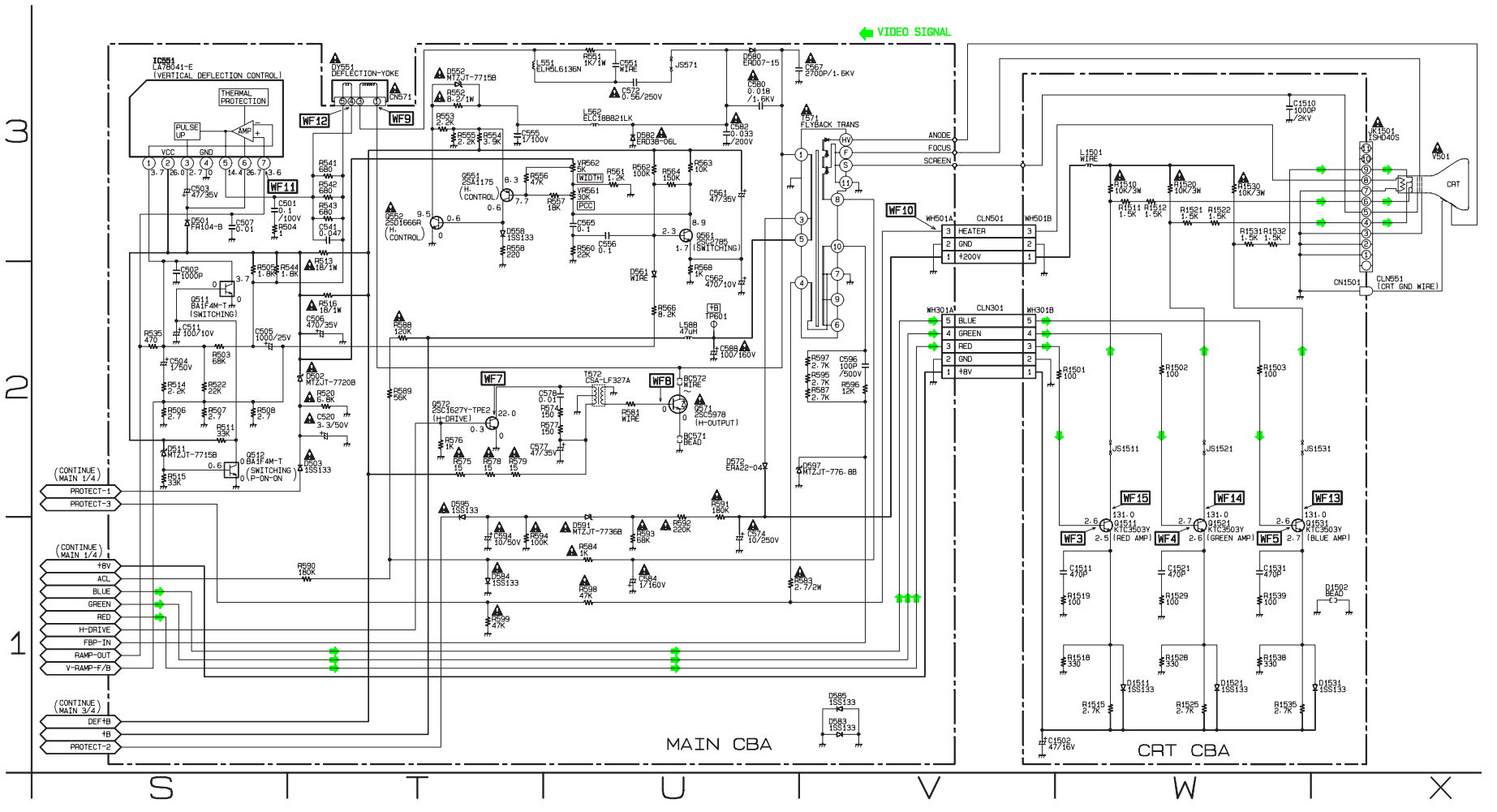

Main CBA Top View

CAUTION !
Fixed voltage (or Auto voltage selectable) power supply circuit is used in this unit.
If Main Fuse (F601) is blown , check to see that all components in the power supply circuit are not defective before you connect the AC plug to the AC power supply.
Otherwise it may cause some components in the power supply circuit to fail.

4A/125V

CAUTION ! : For continued protection against risk of fire, replace only with same type 4 A, 125V fuse.
ATTENTION : Utiliser un fusible de rechange de même type de 4A, 125V.

NOTE:
The voltage for parts in hot circuit is measured using hot GND as a common terminal.

Because a hot chassis ground is present in the power supply circuit, an isolation transformer must be used. Also, in order to have the ability to increase the input slowly,when troubleshooting this type power supply circuit, a variable isolation transformer is required.

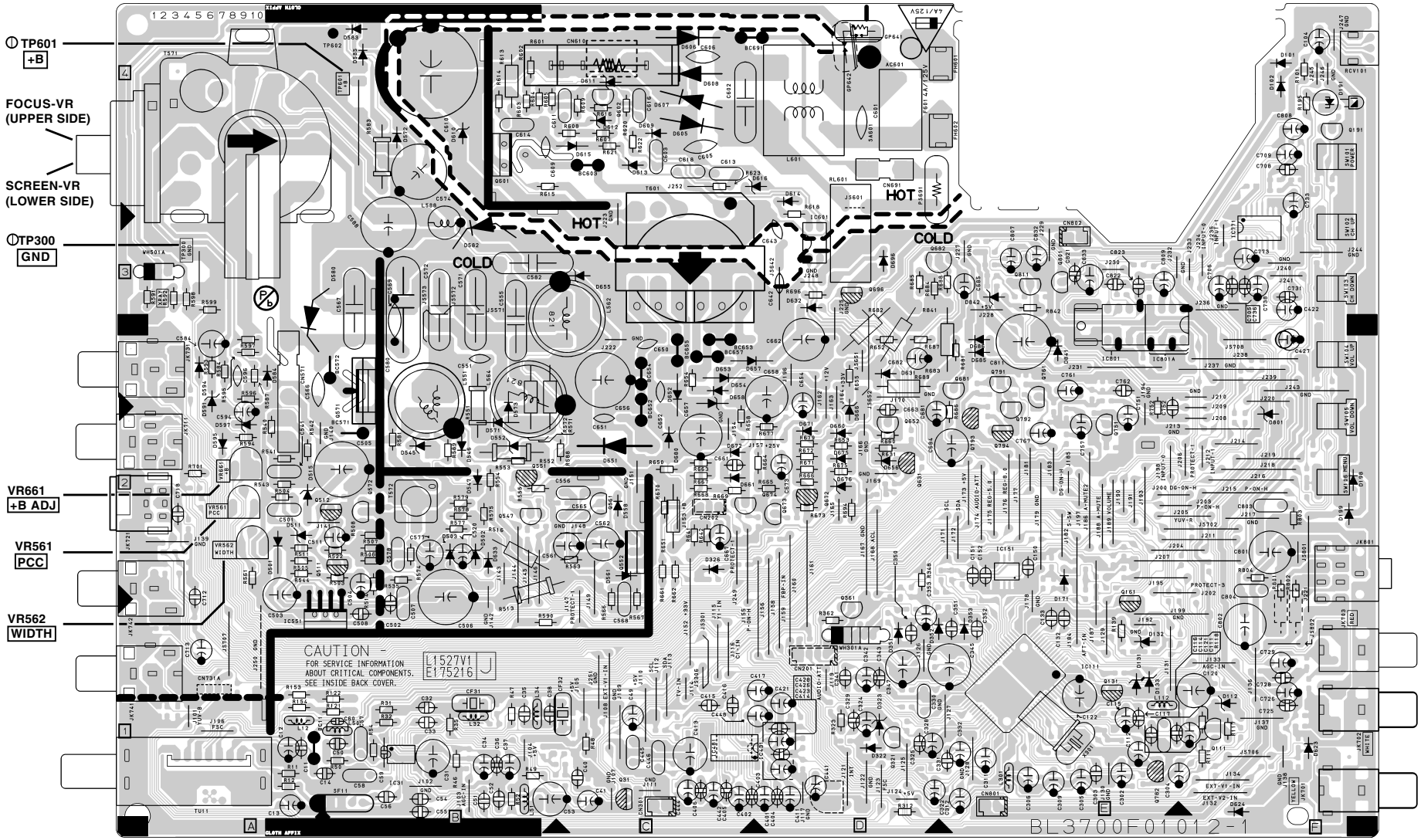

MAIN CBA

Ref No.	Position
ICS	
IC31	B-1
IC111	E-1
IC151	E-2
IC431	D-1
IC551	A-1
IC601	D-3
IC771	F-3
IC801	E-3
TRANSISTORS	
Q111	F-1
Q131	E-1
Q161	E-2
Q321	D-1
Q361	D-1
Q511	A-2
Q512	B-2
Q551	B-2
Q552	C-2
Q561	C-2
Q571	B-2
Q572	B-2
Q601	B-4
Q602	C-4
Q652	D-2
Q672	D-2
Q673	D-2
Q674	D-3
Q681	E-3
Q682	D-3
Q696	D-3
Q801	E-3
Q811	E-3
CONNECTORS	
CN571	A-3
CN691	D-4
CN801	E-1
CN802	E-3
WH301A	D-1
WH501A	A-3
TEST POINTS	
TP300	A-3
TP601	B-4
VARIABLE RESISTORS	
VR561	A-2
VR562	A-2
VR661	A-2

Main CBA Bottom View

CAUTION !
Fixed voltage (or Auto voltage selectable) power supply circuit is used in this unit.
If Main Fuse (F601) is blown , check to see that all components in the power supply circuit are not defective before you connect the AC plug to the AC power supply.
Otherwise it may cause some components in the power supply circuit to fail.

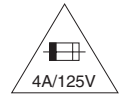

CAUTION ! : For continued protection against risk of fire, replace only with same type 4 A, 125V fuse.
ATTENTION : Utiliser un fusible de rechange de même type de 4A, 125V.

NOTE:
The voltage for parts in hot circuit is measured using hot GND as a common terminal.

Because a hot chassis ground is present in the power supply circuit, an isolation transformer must be used. Also, in order to have the ability to increase the input slowly,when troubleshooting this type power supply circuit, a variable isolation transformer is required.

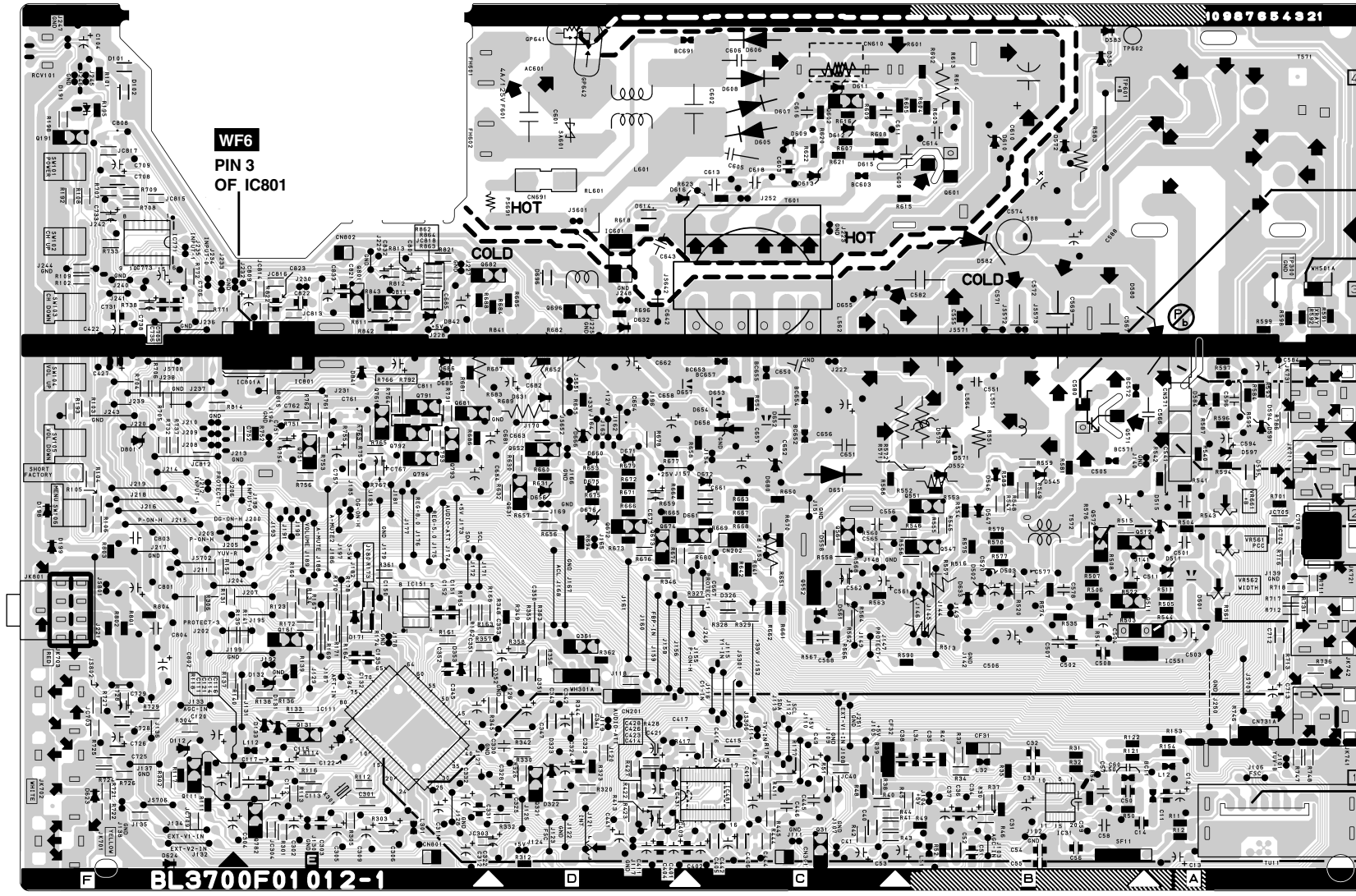

CRT CBA Top View

CRT CBA Bottom View

CRT CBA

Ref No.	Position
TRANSISTORS	
Q1511	A-2
Q1521	A-2
Q1531	A-2
CONNECTORS	
CN1501	B-1
WH301B	B-2
WH501B	B-1

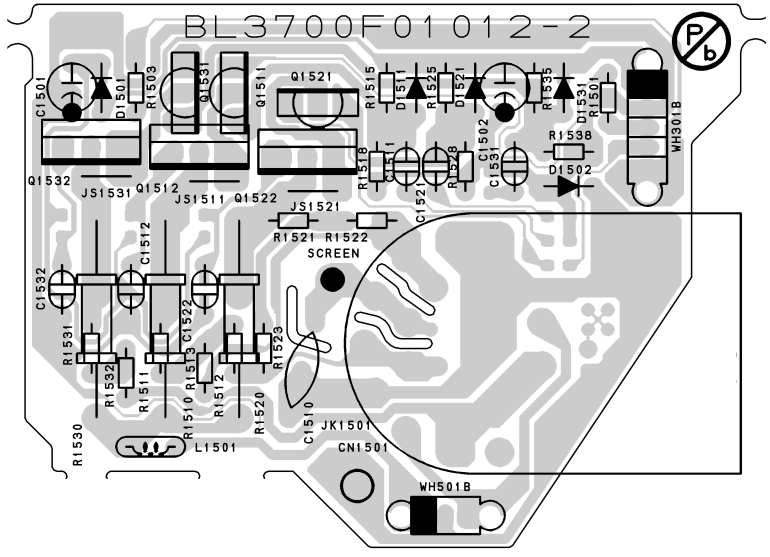

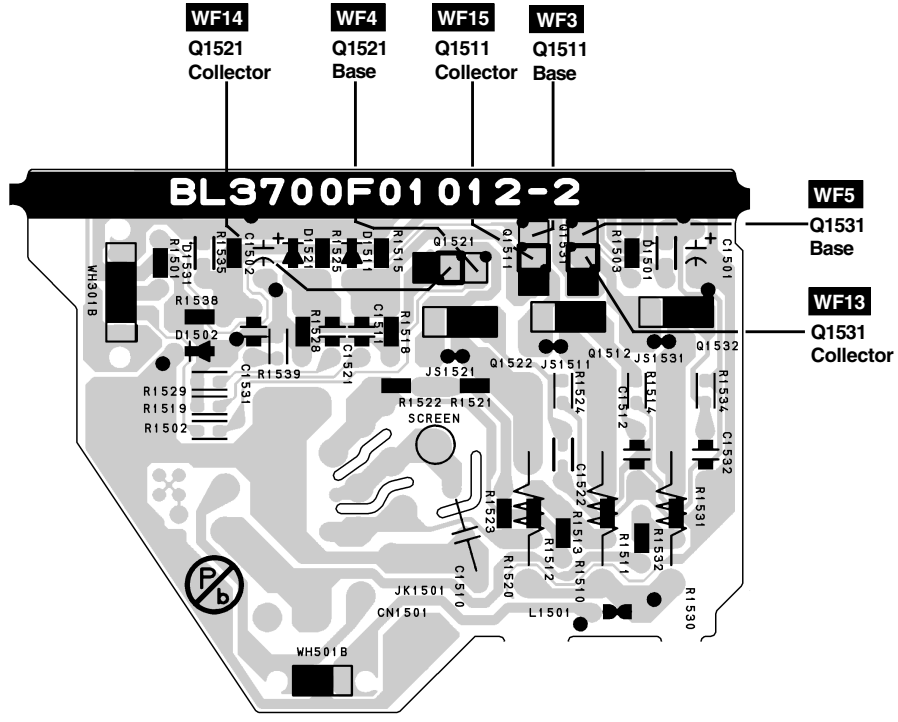

WAVEFORMS

WF1 ~ WF16 = Waveforms to be observed at
Waveform check points.
(Shown in Schematic Diagram.)

Input: NTSC Color Bar Signal (with 1kHz Audio Signal)
INITIAL POSITION: Unplug unit from AC outlet for at least 5 minutes.
reconnect to AC outlet and then turn power on.
(Brightness---Center Color---Center Tint --- Center Contrast---Approx 70%)

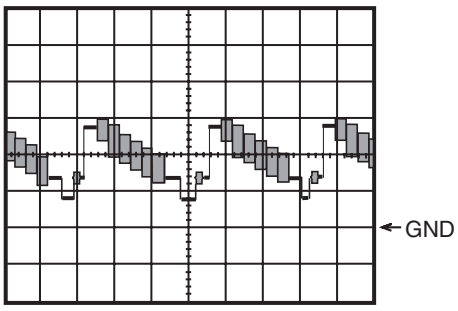

WF1 1DIV: 0.5V 20µs
IC 111 Pin 26

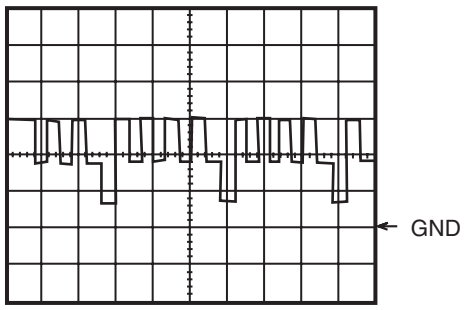

WF5 1DIV: 2V 20µs
Q 1531 Base

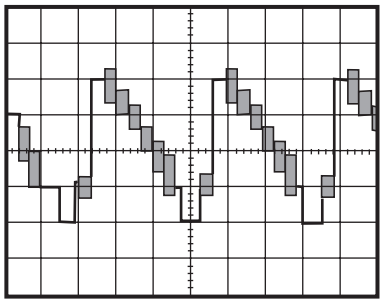

WF2 1DIV: 0.5V 20µs
IC 111 Pin 14

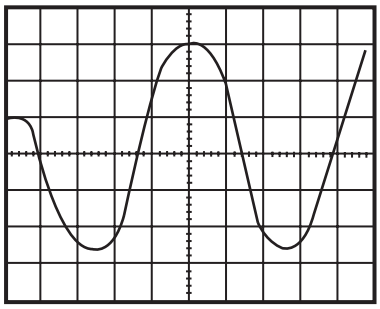

WF6 1DIV: 0.2V 20ms
IC 801 Pin 3

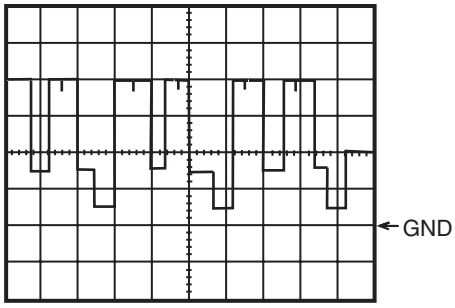

WF3 1DIV: 2V 20µs
Q1511 Base

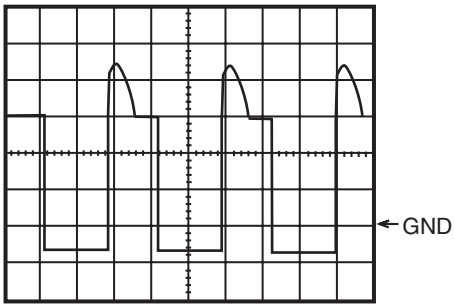

WF7 1DIV: 10V 20µs
Q 572 Collector

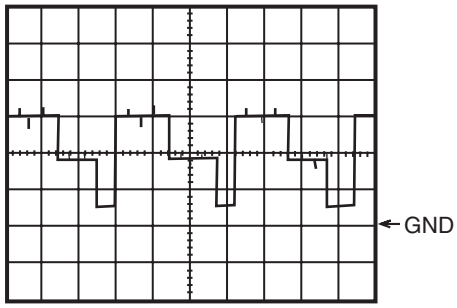

WF4 1DIV: 2V 20µs
Q 1521 Base

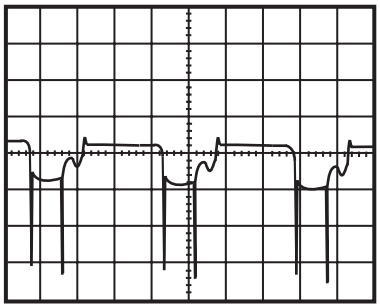

WF8 1DIV: 5V 20µs
Q 571 Base

WF1 ~ WF16 = Waveforms to be observed at
Waveform check points.
(Shown in Schematic Diagram.)

Input: NTSC Color Bar Signal (with 1kHz Audio Signal)
INITIAL POSITION: Unplug unit from AC outlet for at least 5 minutes.
reconnect to AC outlet and then turn power on.
(Brightness---Center Color---Center Tint --- Center Contrast---Approx 70%)

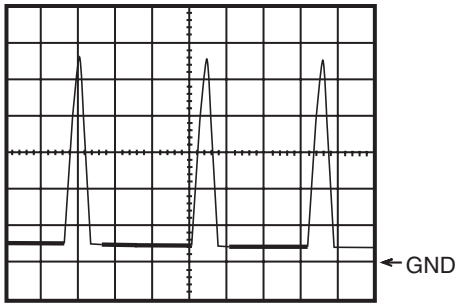

WF9 1DIV: 200V 20µs
CN 571 Pin 1

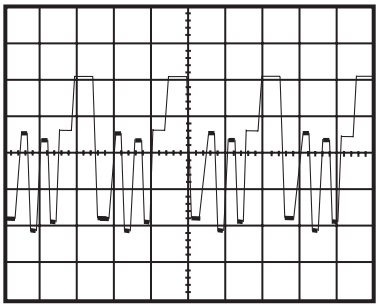

WF13 1DIV: 20V 20µs
Q 1531 Collector

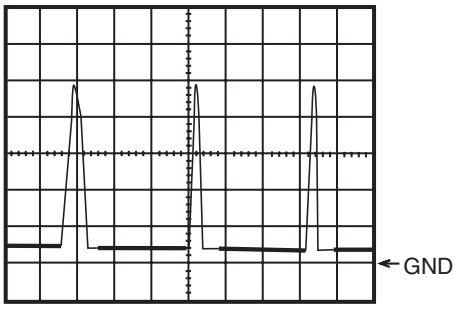

WF10 1DIV: 5V 20µs
WH501A Pin 3

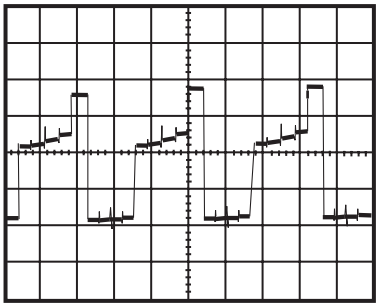

WF14 1DIV: 20V 20µs
Q 1521 Collector

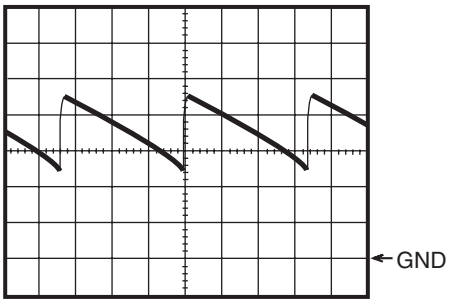

WF11 1DIV: 1V 5ms
IC 551 Pin 7

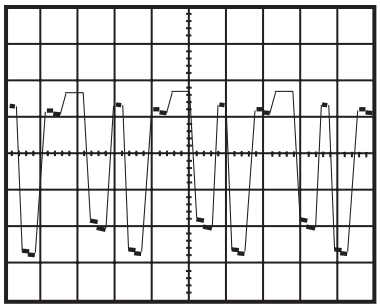

WF15 1DIV: 20V 20µs
Q 1511 Collector

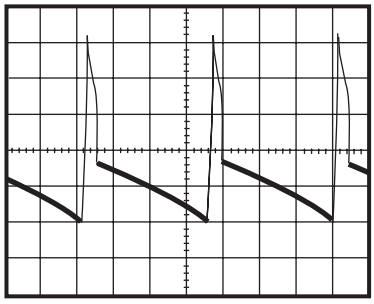

WF12 1DIV: 10V 5ms
CN 571 Pin 4

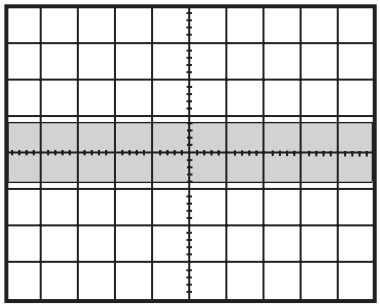

WF16 1DIV: 0.2V 20µs
TU 11 Pin 5

WIRING DIAGRAM

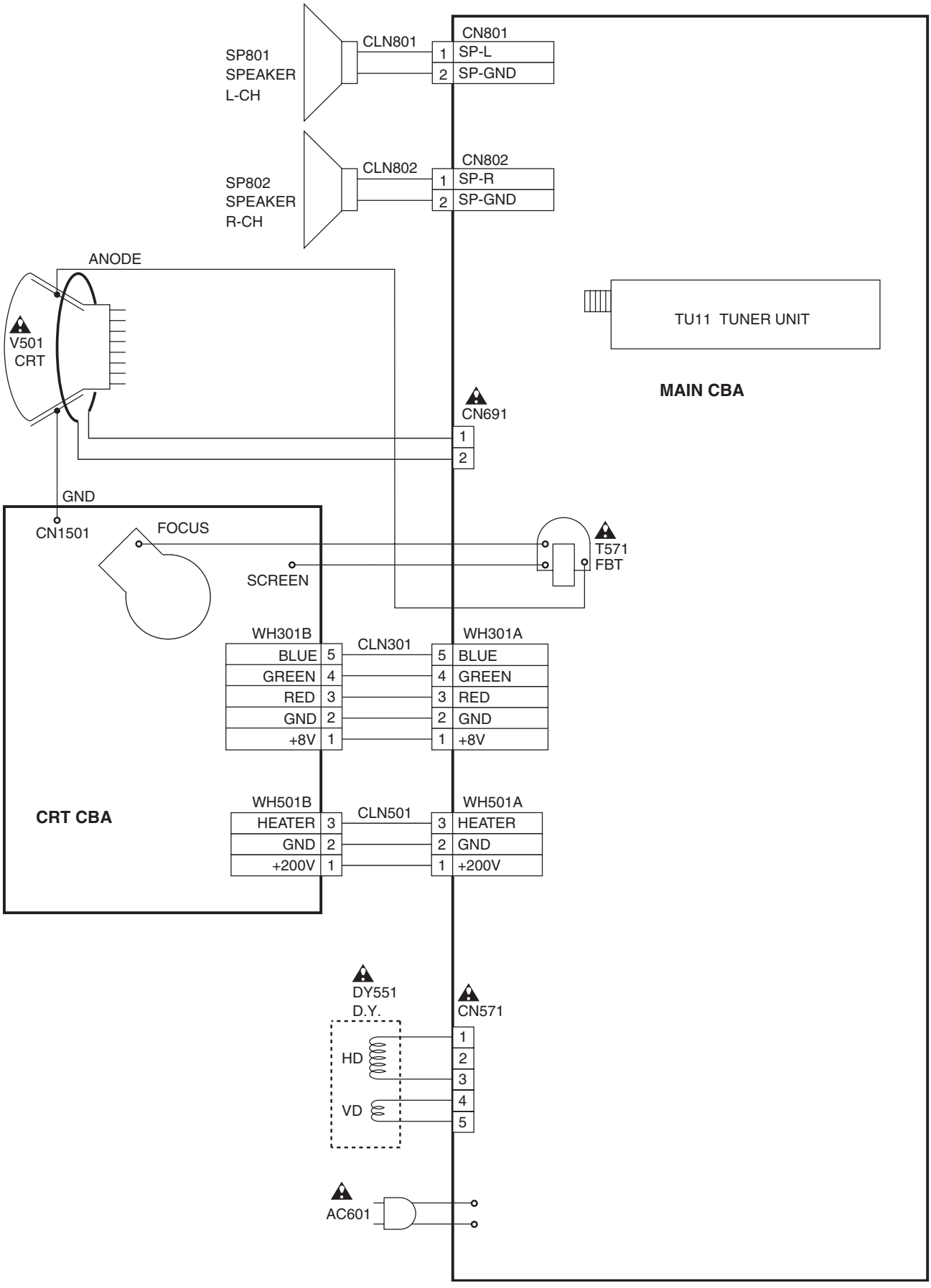

IC PIN FUNCTION DESCRIPTIONS

IC111 (TV Micro Controller)

Pin No.	Signal Name	Function
1	CNVSS	GND
2	N.U.	Not Used
3	N.U.	Not Used
4	N.U.	Not Used
5	GND	GND
6	VCC	ALL +5V
7	N.U.	(GND)
8	FILT	FILT
9	HLF	Filter for CCD
10	VHOLD	VHOLD
11	CVIN	Input for Video Signal
12	RESET	RESET
13	MCU RESET OUT	RESET Signal Output
14	Y-SW OUT	Composite Signal Output
15	GND	GND
16	3.58 X'TAL	3.58MHz Crystal
17	C-APC	CHROMINANCE APC
18	MCU 5.7REG OUT	Micro controller Control Voltage Output
19	N.U.	Not Used
20	N.U.	Not Used
21	N.U.	Not Used
22	VCC	VCC
23	N.U.	(GND)
24	CVBS IN2	Composite Signal Input 2
25	N.U.	Not Used
26	CVBS IN1	Composite Signal Input 1
27	N.U.	Not Used
28	5.7V REG OUT	5.7V Output
29	N.U.	Not Used
30	N.U.	Not Used
31	V REG VCC	DC 8.7V Input
32	FSC OUT	Clock Output 3.58MHz
33	N.U.	Not Used
34	N.U.	Not Used
35	N.U.	Not Used
36	N.U.	Not Used
37	V RAMP F/B	V Ramp Feed Back
38	V RAMP OUT	Vertical Output
39	V RAMP CAP	V Ramp OSC Capacitor
40	8.7 VREG OUT	DC 8.7V Output
41	N.U.	Not Used
42	H VCO F/B	H Vco Feed Back
43	AFC FILT	Horizontal AFC Filter
44	GND	GND
45	FBP IN	Flyback Pulse Input
46	H-OUT	H Pulse Output
47	VCC	Vcc
48	VCC	Vcc
49	VCC	Vcc
50	R OUT	Red Output
51	G OUT	Green Output
52	B OUT	Blue Output
53	ACL	IB-Input
54	N.U.	Not Used
55	N.U.	Not Used
56	SDA	I2C-BUS Controller Interface (Data)
57	A-MUTE	Audio Mute
58	SCL	I2C-BUS Controller Interface (Clock)
59	N.U.	(GND)
60	N.U.	Not Used
61	S-SW	Detecting S-VIDEO Jack Connection
62	VOLUME	Volume
63	INPUT0	Input Select 0
64	N.U.	Not Used
65	N.U.	Not Used
66	KEY-IN 1	Key Input 1 (Main)
67	PROTECT-2	Power Supply Protection
68	PROTECT-1	Power Supply Protection
69	KEY-IN 2	Key Input 2 (Main)
70	RCV-IN	Input For Remote Control
71	P-ON-L	Output for P-ON-L
72	I2C OPEN	White Balance Adjustment Judgement
73	AFT-IN	AFT Voltage Input

Pin No.	Signal Name	Function
74	DG-ON-H	Degaussing Coil Control
75	AGC	AGC Voltage Input
76	PROTECT-3	Power Supply Protection
77	N.U.	Not Used
78	N.U.	Not Used
79	P-ON-H	Output for P-ON-H
80	INPUT1	Input Select 1

EXPLODED VIEWS

Cabinet

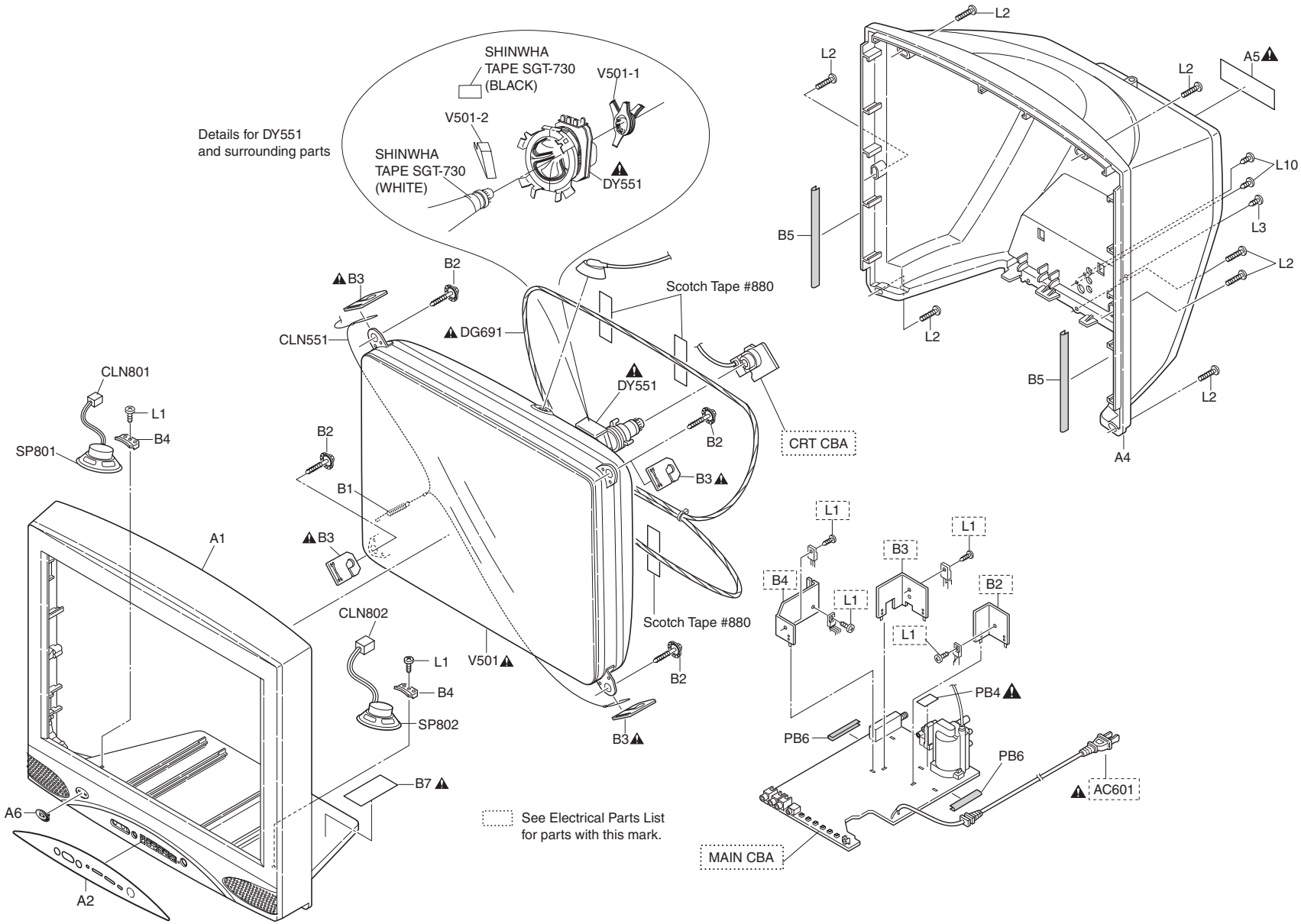

Packing

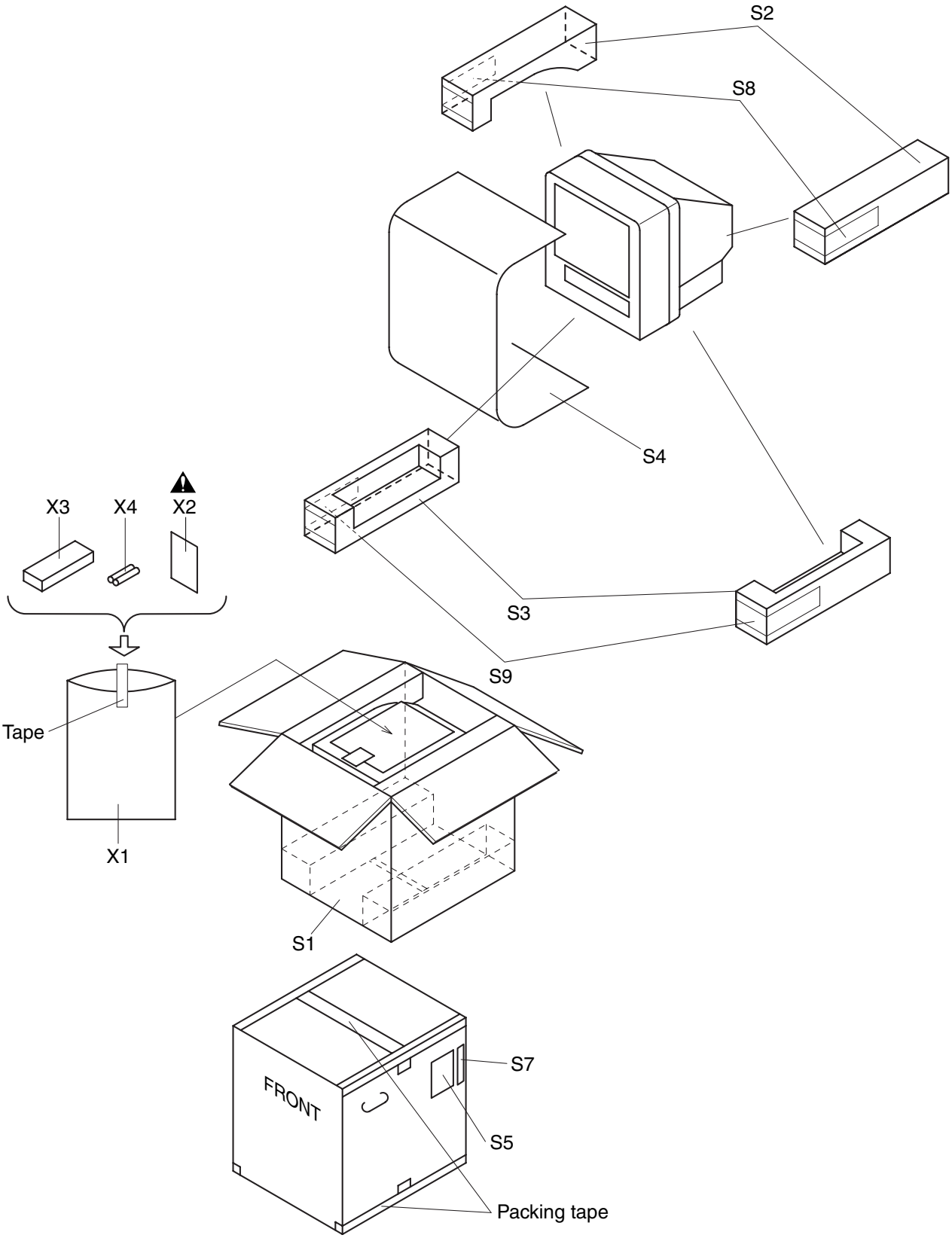

MECHANICAL PARTS LIST

PRODUCT SAFETY NOTE: Products marked with a ⚠ have special characteristics important to safety. Before replacing any of these components, read carefully the product safety notice in this service manual. Don't degrade the safety of the product through improper servicing.

NOTE: Parts that are not assigned part numbers (---------) are not available.

Ref. No.	Description	Part No.
A1	FRONT CABINET L3401CB	1EM220381
A2	CONTROL PLATE L3401CB	1EM320600
A4	REAR CABINET L3408UJ	1EM120287
A5⚠	RATING LABEL L3401CB	---------
A6	BRAND BADGE L2204UE	0EM408903
B1	SPRING TENSION B0080B0 EM40808	26WH006
B2	CRT SCREW L6240UA	0EM406916
B3⚠	HOLDER DEGAUSS L1200UA	0EM405869
B4	SPEAKER HOLDER L1200UA	0EM405691
B5	CLOTH L9800UA 95X15XT 0 0.5	0EM405041
B7⚠	LABEL CRITICAL PARTS WARN ING B8007C3 EM41210	---------
CLN551	WIRE CRT GND WX1L6240-005	WX1L6240-005
CLN801	WIRE ASSEMBLY SPEAKER WIRE(180MM)	WX1L9800-001
CLN802	WIRE ASSEMBLY WX1L2700-001	WX1L2700-001
DG691⚠	DEGAUSSING COIL LLBH00ZTM048	LLBH00ZTM048
L1	SCREW P-TIGHT 3X12 BIND HEAD+	GBMP3120
L2	SCREW P-TIGHT 4X18 BIND HEAD +	GBMP4180
L3	SCREW TAPPING M4X14	DBU14140
L10	SCREW P-TIGHT 3X10 BIND HEAD+	GBKP3100
PB4⚠	CHASISS NO. LABEL L1524V3	---------
PB6	CLOTH(65) L7735TR 65X10X0.5T	0EM402149
SP801	SPEAKER S08N04	DSD0808XQ013
SP802	SPEAKER S08N04	DSD0808XQ013
PACKING		
S1	CARTON L3401CB	1EM421401
S2	STYROFOAM TOP L3402UC	1EM020190
S3	STYROFOAM BOTTOM L3402UC	1EM020191
S4	SET SHEET 1150X1900	1EM421024
S5	SERIAL NO. LABEL L3401CB	---------
S7	LABEL EAS(H3761UD) MAKER NO.ZLLFNSLE1	---------
S8	PACKING TAPE WIDETH 48MM	0EZZ00001
S9	PACKING TAPE WIDETH 48MM	0EZZ00001
ACCESSORIES		
X1	BAG POLYETHYLENE 235X365XT0.03	0EM408420
X2⚠	OWNER S MANUAL ENGLISH/SPANISH	1EMN20589
X3	REMOTE CONTROL NE141UD	NE141UD
X4	DRY BATTERY R6P/2S	XB0M451T0001
Note: 1. V501 (CRT) HAS COUPLE OF SUBSTITUTIONAL PARTS AND EACH PARTS ALSO HAS MATCHING COMBINATION WITH DY551. PLEASE SEE TABLE 1 FOR DETAILS OF MATCHING COMBINATION. 2. DY551 (DEFLECTION YOKE) HAS MATCHING COMBINATION WITH V501. PLEASE SEE TABLE 1 FOR DETAILS OF MATCHING COMBINATION.		
CRT TYPE A		
DY551⚠	DEFLECTION YOKE CDY-F2518F	LLBY00ZQS016
V501⚠	CRT A59KPR84X	TCRT190SM029
V501-1	PCM JH88DTA	XM04000BV010
V501-2	WEDGE FT-00110W	XV10000T4001
CRT TYPE B		
DY551⚠	DEFLECTION YOKE 6150Z-1030X	LLBY00ZGS007
V501⚠	CRT A59KYL220X	TCRT190GS040
V501-1	PCM JH88DTA	XM04000BV010
V501-2	WEDGE FT-00110W	XV10000T4001
CRT TYPE C		
V501⚠	CRT A59KPR84X01 S	TCRT190SM037
V501-2	WEDGE FT-00110W	XV10000T4001
CRT TYPE D		
V501⚠	CRT(BARE+DY) A59ELN011X007	TCRT190TMS01
V501-2	WEDGE FT-00110W	XV10000T4001

Table 1 (V501 and DY551 Combination)

Note 1: Purity and Convergence Adjustments must be performed following CRT replacement. Refer to Electrical Adjustment Instructions.

Note 2: Please confirm CRT Type No. on the CRT Warning Label which is located on the CRT. Then See the Table 1 for V501 and DY551 combination chart. Please refer this CRT, Deflection Yoke combination chart for parts order.

V501: CRT Type No.	V501: CRT Part No.	DY551: Deflection Yoke Part No.
A59KPR84X	TCRT190SM029	LLBY00ZQS016
A59KYL220X	TCRT190GS040	LLBY00ZGS007
A59KPR84X01 S	TCRT190SM037	----------
A59ELN011X007	TCRT190TMS01	----------

CRT Warning Label Location

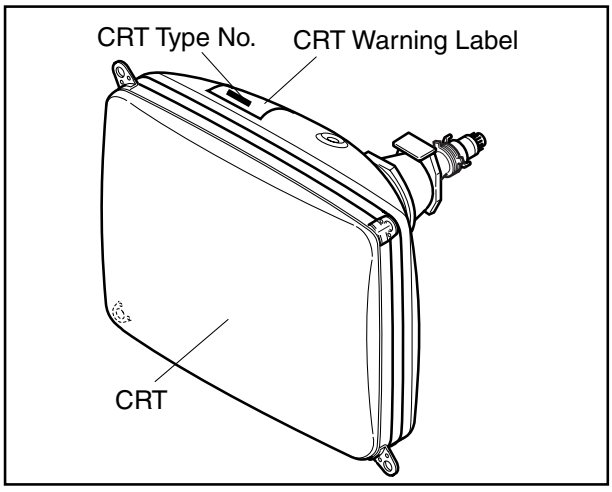

ELECTRICAL PARTS LIST

PRODUCT SAFETY NOTE: Products marked with a ⚠ have special characteristics important to safety. Before replacing any of these components, read carefully the product safety notice in this service manual. Don't degrade the safety of the product through improper servicing.

NOTES:

1. Parts that are not assigned part numbers (---------) are not available.
2. Tolerance of Capacitors and Resistors are noted with the following symbols.

C.....±0.25% D.....±0.5% F.....±1%

G.....±2% J.....±5% K.....±10%

M.....±20% N.....±30% Z.....+80/-20%

MMA CBA

Ref. No.	Description	Part No.
	MMA CBA Consists of the following:	1ESA10811
	MAIN CBA CRT CBA	--------- ---------

MAIN CBA

Ref. No.	Description	Part No.
	MAIN CBA Consists of the following:	---------
	CAPACITORS	
C11	CERAMIC CAP.(AX) F Z 0.01μF/25V	CCA1EZTFZ103
C12	ELECTROLYTIC CAP. 100μF/10V M	CE1AMASDL101
C13	ELECTROLYTIC CAP. 4.7μF/50V M	CE1JMASDL4R7
C14	CERAMIC CAP.(AX) B 0.01μF/50V	CCK1JKT0B103
C31	ELECTROLYTIC CAP. 100μF/10V M	CE1AMASDL101
C34	ELECTROLYTIC CAP. 0.47μF/50V M	CE1JMASDLR47
C35	CERAMIC CAP.(AX) SL J 47pF/50V	CCA1JJTSL470
C36	CERAMIC CAP.(AX) B K 1000pF/50V	CCA1JKT0B102
C37	ELECTROLYTIC CAP. 1μF/50V M	CE1JMASDL1R0
C38	CERAMIC CAP.(AX) SL J 47pF/50V	CCA1JJTSL470
C49	ELECTROLYTIC CAP. 4.7μF/50V M	CE1JMASDL4R7
C50	CERAMIC CAP.(AX) CH K 3.3pF/50V	CCA1JKTCH3R3
C51	CERAMIC CAP.(AX) B K 1000pF/50V	CCA1JKT0B102
C52	CHIP CERAMIC CAP. B K 0.01μF/50V	CHD1JKB0B103
C53	ELECTROLYTIC CAP. 100μF/10V M	CE1AMASDL101
C54	CERAMIC CAP.(AX) B K 1000pF/50V	CCA1JKT0B102
C55	CERAMIC CAP.(AX) F Z 0.01μF/25V	CCA1EZTFZ103
C56	PCB JUMPER D0.6-P5.0	JW5.0T
C57	FILM CAP.(P) 0.047μF/50V J	CMA1JJS00473
C58	FILM CAP.(P) 0.033μF/50V J	CMA1JJS00333
C59	CERAMIC CAP.(AX) CH K 2.7pF/50V	CCA1JKTCH2R7
C60	CERAMIC CAP.(AX) CH K 5.6pF/50V	CCA1JKTCH5R6
C104	ELECTROLYTIC CAP. 10μF/50V M	CE1JMASDL100
C111	ELECTROLYTIC CAP. 47μF/16V M	CE1CMASDL470
C112	ELECTROLYTIC CAP. 4.7μF/50V M	CE1JMASDL4R7
C113	CHIP CERAMIC CAP. F Z 0.1μF/25V	CHD1EZB0F104
C114	FILM CAP.(P) 0.001μF/50V J	CMA1JJS00102
C115	ELECTROLYTIC CAP. 0.1μF/50V M	CE1JMASDL0R1
C116	CERAMIC CAP.(AX) B K 220pF/50V	CCA1JKT0B221
C117	CERAMIC CAP.(AX) Y K 0.01μF/16V	CCA1CKT0Y103
C120	ELECTROLYTIC CAP. 100μF/10V M	CE1AMASDL101
C122	ELECTROLYTIC CAP. 100μF/10V M	CE1AMASDL101
C132	CERAMIC CAP.(AX) F 0.1μF/50V	CCK1JZT0F104
C133	CERAMIC CAP.(AX) F Z 0.01μF/25V	CCA1EZTFZ103
C150	CHIP CERAMIC CAP. F Z 0.1μF/25V	CHD1EZB0F104
C151	CERAMIC CAP.(AX) B K 220pF/50V	CCA1JKT0B221
C152	CERAMIC CAP.(AX) B K 220pF/50V	CCA1JKT0B221
C301	CHIP CERAMIC CAP. CH J 120pF/50V	CHD1JJBCH121
C302	ELECTROLYTIC CAP. 1μF/50V M	CE1JMASDL1R0
C303	CERAMIC CAP.(AX) B 0.015μF/50V	CCK1JKT0B153
C305	ELECTROLYTIC CAP. 0.1μF/50V M	CE1JMASDL0R1
C306	ELECTROLYTIC CAP. 100μF/10V M	CE1AMASDL101
C309	ELECTROLYTIC CAP. 0.1μF/50V M	CE1JMASDL0R1
C322	ELECTROLYTIC CAP. 0.47μF/50V M	CE1JMASDLR47
C324	ELECTROLYTIC CAP. 10μF/50V M	CE1JMASDL100
C325	CERAMIC CAP.(AX) SL J 12pF/50V	CCA1JJTSL120
C328	ELECTROLYTIC CAP. 220μF/10V M	CE1AMASDL221
C329	CERAMIC CAP.(AX) F Z 0.01μF/25V	CCA1EZTFZ103
C330	STACKED FILM CAP. 0.47μF/50V J	CMA1JJS00474
C331	CERAMIC CAP.(AX) B K 1000pF/50V	CCA1JKT0B102
C332	ELECTROLYTIC CAP. 10μF/50V M	CE1JMASDL100
C341	CHIP CERAMIC CAP. B K 0.01μF/50V	CHD1JKB0B103
C342	ELECTROLYTIC CAP. 1μF/50V M	CE1JMASDL1R0
C343	CHIP CERAMIC CAP. B K 0.01μF/50V	CHD1JKB0B103
C345	ELECTROLYTIC CAP. 1000μF/10V M	CE1AMASDL102
C351	CHIP CERAMIC CAP. CH J 100pF/50V	CHD1JJBCH101
C353	ELECTROLYTIC CAP. 0.47μF/50V M	CE1JMASDLR47
C401	ELECTROLYTIC CAP. 3.3μF/50V M	CE1JMASDL3R3
C402	ELECTROLYTIC CAP. 3.3μF/50V M	CE1JMASDL3R3
C403	CERAMIC CAP.(AX) F 0.1μF/50V	CCK1JZT0F104
C404	CERAMIC CAP.(AX) B 0.022μF/50V	CCK1JKT0B223
C405	CHIP CERAMIC CAP. F Z 0.1μF/25V	CHD1EZB0F104
C406	CHIP CERAMIC CAP. B K 0.033μF/25V	CHD1EKB0B333
C411	ELECTROLYTIC CAP. 4.7μF/50V M	CE1JMASDL4R7
C413	ELECTROLYTIC CAP. 100μF/10V M	CE1AMASDL101
C414	ELECTROLYTIC CAP. 2.2μF/50V M	CE1JMASDL2R2
C415	CHIP CERAMIC CAP. CH J 150pF/50V	CHD1JJBCH151
C416	CHIP CERAMIC CAP. CH J 150pF/50V	CHD1JJBCH151
C417	ELECTROLYTIC CAP. 2.2μF/50V M	CE1JMASDL2R2
C421	ELECTROLYTIC CAP. 4.7μF/50V M	CE1JMASDL4R7
C422	ELECTROLYTIC CAP. 0.47μF/50V M H7	CE1JMASSLR47
C423	CHIP CERAMIC CAP. B K 4700pF/50V	CHD1JKB0B472
C426	ELECTROLYTIC CAP. 4.7μF/50V M	CE1JMASDL4R7
C427	ELECTROLYTIC CAP. 0.47μF/50V M H7	CE1JMASSLR47
C428	CERAMIC CAP.(AX) X K 4700pF/16V	CCA1CKT0X472
C441	ELECTROLYTIC CAP. 10μF/50V M	CE1JMASDL100
C442	ELECTROLYTIC CAP. 2.2μF/50V M	CE1JMASDL2R2
C444	ELECTROLYTIC CAP. 0.33μF/50V M	CE1JMASDLR33
C445	FILM CAP.(P) 0.1μF/50V J	CMA1JJS00104
C446	FILM CAP.(P) 0.1μF/50V J	CMA1JJS00104
C448	ELECTROLYTIC CAP. 2.2μF/50V M	CE1JMASDL2R2
C501	FILM CAP.(P) 0.1μF/100V J	CMA2AJS00104
C502	CERAMIC CAP.(AX) B K 1000pF/50V	CCA1JKT0B102
C503	ELECTROLYTIC CAP. 47μF/35V M	CE1GMASDL470
C504	ELECTROLYTIC CAP. 1μF/50V LL	CE1JMASLH1R0
C505	ELECTROLYTIC CAP. 1000μF/25V M	CE1EMZNTL102
C506	ELECTROLYTIC CAP. 470μF/35V M(VR)	CE1GMZNTL471
C507	FILM CAP.(P) 0.01μF/50V J	CMA1JJS00103
C511	ELECTROLYTIC CAP. 100μF/10V M	CE1AMASDL101

Ref. No.	Description	Part No.
C520⚠	ELECTROLYTIC CAP. 3.3μF/50V M	CE1JMASDL3R3
C541	FILM CAP.(P) 0.047μF/100V J	CMA2AJS00473
C551	PCB JUMPER D0.6-P7.5	JW7.5T
C555	METALIZED PLYESTER CAP. 1μF/100V J	CT2A105MS065
C556	FILM CAP.(P) 0.1μF/50V J	CMA1JJS00104
C561	ELECTROLYTIC CAP. 47μF/35V M	CE1GMASDL470
C562	ELECTROLYTIC CAP. 470μF/10V M	CE1AMASDL471
C565	FILM CAP.(P) 0.1μF/50V J	CMA1JJS00104
C567⚠	PP CAP. 0.0027μF/1.6KV J	CA3C272VC010
C572⚠	PP CAP. 0.56μF/250V J	CT2E564MS041
C574⚠	ELECTROLYTIC CAP 10μF/250V M	CE2EMZNDL100
C577	ELECTROLYTIC CAP. 47μF/35V M	CE1GMASDL470
C578	FILM CAP.(P) 0.01μF/50V J	CMA1JJS00103
C580⚠	PP CAP. 0.018μF/1.6KV J	CA3C183VC010
C582⚠	P.P. CAP 0.033μF/200V J	CA2D333VC013
C584⚠	ELECTROLYTIC CAP. 1μF/160V M	CE2CMASDL1R0
C588⚠	ELECTROLYTIC CAP. 100μF/160V M	CE2CMZPTL101
C594⚠	ELECTROLYTIC CAP. 10μF/50V M	CE1JMASDL100
C596	CERAMIC CAP. B K 100pF/500V	CCD2JKS0B101
C601⚠	METALLIZED FILM CAP. 0.33μF/250V	CT2E334MS037
C602⚠	LINE ACROSS CAP. 0.1U/250V	CT2E104DC015
C605	CERAMIC CAP. F Z 0.01μF/500V	CCD2JZP0F103
C606	CERAMIC CAP. F Z 0.01μF/500V	CCD2JZP0F103
C609	CERAMIC CAP. BN 680pF/2KV	CCD3DKA0B681
C610⚠	ELECTROLYTIC CAP. 220μF/200V	CA2D221NC088
C611	FILM CAP.(P) 0.015μF/50V J	CMA1JJS00153
C614	FILM CAP.(P) 0.0027μF/50V J	CMA1JJS00272
C616	FILM CAP.(P) 0.082μF/50V J	CMA1JJS00823
If C642 is 0.01μF, then C643 is 0.01μF.		
C642⚠	SAFETY CAP. 10000pF/250V	CCG2EMA0F103
C643⚠	SAFETY CAP. 10000pF/250V	CCG2EMA0F103
If C643 is 4700pF, then JS642 (PCB JUMPER) is used.		
C643⚠	SAFETY CAP. 4700pF/250V KX	CA2E472MR050
JS642	PCB JUMPER D0.6-P10.0	JW10.0T
C650	CERAMIC CAP. BN 560pF/2KV	CCD3DKA0B561
C652	CERAMIC CAP. B K 2200pF/500V	CCD2JKS0B222
C654⚠	ELECTROLYTIC CAP. 1μF/50V M	CE1JMASDL1R0
C656⚠	ELECTROLYTIC CAP. 100μF/160V M	CE2CMZPTL101
C657⚠	ELECTROLYTIC CAP. 470μF/35V M(VR)	CE1GMZNTL471
C658⚠	ELECTROLYTIC CAP. 1000μF/16V M(VR/HC)	CE1CMZNTL102
C662	ELECTROLYTIC CAP. 1000μF/16V M(VR/HC)	CE1CMZNTL102
C663	CERAMIC CAP.(AX) B K 1000pF/50V	CCA1JKT0B102
C667	ELECTROLYTIC CAP. 1μF/50V M	CE1JMASDL1R0
C673	ELECTROLYTIC CAP. 2.2μF/50V M	CE1JMASDL2R2
C681	ELECTROLYTIC CAP. 1μF/50V M	CE1JMASDL1R0
C682	ELECTROLYTIC CAP. 100μF/10V M	CE1AMASDL101
C684	ELECTROLYTIC CAP. 1000μF/10V M	CE1AMASDL102
C685	ELECTROLYTIC CAP. 100μF/10V M	CE1AMASDL101
C705	CERAMIC CAP.(AX) X K 3900pF/16V	CCA1CKT0X392
C706	ELECTROLYTIC CAP. 0.47μF/50V M	CE1JMASDLR47
C708	CHIP CERAMIC CAP. B K 3900pF/50V	CHD1JKB0B392
C709	ELECTROLYTIC CAP. 0.47μF/50V M	CE1JMASDLR47
C713	ELECTROLYTIC CAP. 10μF/50V M	CE1JMASDL100
C718	CERAMIC CAP.(AX) B K 1000pF/50V	CCA1JKT0B102
C725	CHIP CERAMIC CAP. B K 3900pF/50V	CHD1JKB0B392
C726	ELECTROLYTIC CAP. 0.47μF/50V M	CE1JMASDLR47
C728	CHIP CERAMIC CAP. B K 3900pF/50V	CHD1JKB0B392
C729	ELECTROLYTIC CAP. 0.47μF/50V M	CE1JMASDLR47
C773	ELECTROLYTIC CAP. 100μF/10V M	CE1AMASDL101
C801	ELECTROLYTIC CAP. 220μF/16V M	CE1CMASDL221
C802	ELECTROLYTIC CAP. 220μF/16V M	CE1CMASDL221
C803	FILM CAP.(P) 0.1μF/50V J	CMA1JJS00104
C804	FILM CAP.(P) 0.1μF/50V J	CMA1JJS00104

Ref. No.	Description	Part No.
C807	ELECTROLYTIC CAP. 4.7μF/50V M	CE1JMASDL4R7
C808	ELECTROLYTIC CAP. 1μF/50V M	CE1JMASDL1R0
C809	ELECTROLYTIC CAP. 1μF/50V M	CE1JMASDL1R0
C811	ELECTROLYTIC CAP. 1000μF/16V M(VR/HC)	CE1CMZNTL102
C833	ELECTROLYTIC CAP. 100μF/16V M	CE1CMASDL101
CONNECTORS		
CN571⚠	CONNECTOR BASE 5P TV-50P-05-V3	J3TVC05TG002
CN691⚠	CONNECTOR BASE 2P TV-50P-02-V3	J3TVC02TG002
CN801	STRAIGHT CONNECTOR BASE 00 8283 0212 00 000	J383C02UG002
CN802	STRAIGHT CONNECTOR BASE 00 8283 0212 00 000	J383C02UG002
DIODES		
D101	SWITCHING DIODE 1SS133(T-77)	QDTZ001SS133
D102	SWITCHING DIODE 1SS133(T-77)	QDTZ001SS133
D131	ZENER DIODE MTZJT-775.1B	QDTB0MTZJ5R1
D171	SWITCHING DIODE 1SS133(T-77)	QDTZ001SS133
D322	SWITCHING DIODE 1SS133(T-77)	QDTZ001SS133
D323	ZENER DIODE MTZJT-779.1B	QDTB0MTZJ9R1
D326	SWITCHING DIODE 1SS133(T-77)	QDTZ001SS133
D351	SWITCHING DIODE 1SS133(T-77)	QDTZ001SS133
D352	SWITCHING DIODE 1SS133(T-77)	QDTZ001SS133
D353	SWITCHING DIODE 1SS133(T-77)	QDTZ001SS133
D501	DIODE FR104-B	NDLZ000FR104
D502⚠	ZENER DIODE MTZJT-7720B	QDTB00MTZJ20
D503⚠	SWITCHING DIODE 1SS133(T-77)	QDTZ001SS133
D511	ZENER DIODE MTZJT-7715B	QDTB00MTZJ15
D552⚠	ZENER DIODE MTZJT-7715B	QDTB00MTZJ15
D558	SWITCHING DIODE 1SS133(T-77)	QDTZ001SS133
D561	PCB JUMPER D0.6-P5.0	JW5.0T
D572	FAST RECOVERY DIODE ERA22-04	QDPZ0ERA2204
D580	DIODE ERD07-15	QDLZ0ERD0715
D582⚠	FAST RECOVERY DIODE ERD38-06L	AERD3806L000
D583	SWITCHING DIODE 1SS133(T-77)	QDTZ001SS133
D584⚠	SWITCHING DIODE 1SS133(T-77)	QDTZ001SS133
D585	SWITCHING DIODE 1SS133(T-77)	QDTZ001SS133
D591⚠	ZENER DIODE MTZJT-7736B	QDTB00MTZJ36
D595⚠	SWITCHING DIODE 1SS133(T-77)	QDTZ001SS133
D597	ZENER DIODE MTZJT-776.8B	QDTB0MTZJ6R8
D605⚠	DIODE 1N5406	NDLZ001N5406
D606⚠	DIODE 1N5406	NDLZ001N5406
D607⚠	DIODE 1N5406	NDLZ001N5406
D608⚠	DIODE 1N5406	NDLZ001N5406
D611⚠	ZENER DIODE MTZJT-7724C	QDTC00MTZJ24
D612⚠	ZENER DIODE MTZJT-7736B	QDTB00MTZJ36
D613	ZENER DIODE MTZJT-777.5B	QDTB0MTZJ7R5
D614	SWITCHING DIODE 1SS133(T-77)	QDTZ001SS133
D615⚠	SWITCHING DIODE 1N4148 T-77	QDTZ001N4148
D623	PCB JUMPER D0.6-P5.0	JW5.0T
D651⚠	FAST RECOVERY DIODE 30DF6	QDWZ00030DF6
D652⚠	DIODE FR154	NDLZ000FR154
D653⚠	DIODE FR154	NDLZ000FR154
D654⚠	SWITCHING DIODE 1SS133(T-77)	QDTZ001SS133
D655⚠	ZENER DIODE 1ZB180	QDQZ001ZB180
D656⚠	ZENER DIODE MTZJT-777.5B	QDTB0MTZJ7R5
D657	DIODE FR154	NDLZ000FR154
D658	DIODE 1ZC18	QDQZ0001ZC18
D660	SWITCHING DIODE 1SS133(T-77)	QDTZ001SS133
D661⚠	SWITCHING DIODE 1SS133(T-77)	QDTZ001SS133
D666	ZENER DIODE MTZJT-7736B	QDTB00MTZJ36
D671	SWITCHING DIODE 1SS133(T-77)	QDTZ001SS133
D672	SWITCHING DIODE 1SS133(T-77)	QDTZ001SS133
D675	SWITCHING DIODE 1SS133(T-77)	QDTZ001SS133

Ref. No.	Description	Part No.
D676	ZENER DIODE MTZJT-7718A	QDTA00MTZJ18
D685⚠	SWITCHING DIODE 1SS133(T-77)	QDTZ001SS133
D686	SWITCHING DIODE 1SS133(T-77)	QDTZ001SS133
D696⚠	SWITCHING DIODE 1SS133(T-77)	QDTZ001SS133
D801	ZENER DIODE MTZJT-773.0B	QDTB0MTZJ3R0
D841⚠	SWITCHING DIODE 1SS133(T-77)	QDTZ001SS133
D842⚠	ZENER DIODE MTZJT-775.1B	QDTB0MTZJ5R1
ICS		
IC31	IC VIF/SIF M61116FP TF0G	QSZBA0SHT034
IC111	MICRO COMPUTER+VCD (PB FREE) M61271M8-058FP RF4T	QSZAA0RHT085
IC151	IC MEMORY BR24C02F-W	QSMBA0SRM003
IC431	IC MTS DECORDER AN5832SA-E1V	QSZBA0TMS003
IC551	IC VERTICAL OUTPUT LA78041-E	QSZBA0SSY006
IC601⚠	PHOTO COUPLER PS2501-1L	QPEL0PS25011
IC771	IC SWITCHING TC4052BF(EL)	QSZBA0TTS096
IC801	IC AN17812A	QSZBA0SMS017
COILS		
L12	INDUCTOR 22μH-K-5FT	LLARKBSTU220
L34	INDUCTOR 18μH-J-26T	LLAXJATTU180
L50	INDUCTOR 150μH-J-26T	LLAXJATTU151
L51	INDUCTOR 100μH-J-5FT	LLARJCSTU101
L112	INDUCTOR 22μH-K-5FT	LLARKBSTU220
L301	PCB JUMPER D0.6-P5.0	JW5.0T
L551	LINEARITY COIL ELH5L6136N	LLBD00PMS008
L562	CHOKE COIL ELC18B821LK	LLC821KMS001
L588	CHOKE COIL 47μH-K	LLBD00PKV007
L601⚠	LINE FILTER JLB2460	LLBG00ZXB012
TRANSISTORS		
Q111⚠	TRANSISTOR 2SC2785(F)	QQSF02SC2785
Q131	RES. BUILT-IN TRANSISTOR BA1F4M-T	QQSZ00BA1F4M
Q161	RES. BUILT-IN TRANSISTOR BA1F4M-T	QQSZ00BA1F4M
Q321	TRANSISTOR 2SC2785(F)	QQSF02SC2785
Q361	TRANSISTOR 2SC2785(F)	QQSF02SC2785
Q511	RES. BUILT-IN TRANSISTOR BA1F4M-T	QQSZ00BA1F4M
Q512	RES. BUILT-IN TRANSISTOR BA1F4M-T	QQSZ00BA1F4M
Q551	TRANSISTOR 2SA1175(F)	QQSF02SA1175
Q552⚠	TRANSISTOR 2SD1666R	QQER02SD1666
Q561	TRANSISTOR 2SC2785(F)	QQSF02SC2785
Q571⚠	TRANSISTOR 2SC5978	QQZZ02SC5978
Q572	TRANSISTOR 2SC1627Y-TPE2	QQSY02SC1627
Q601⚠	MOS FET 2SK3561	QFWZ02SK3561
Q602⚠	TRANSISTOR 2SC2120-O(TE2 F T)	QQS02SC2120F
Q652⚠	TRANSISTOR 2SC2785(F)	QQSF02SC2785
Q672⚠	TRANSISTOR 2SA1175(F)	QQSF02SA1175
Q673	TRANSISTOR 2SC2785(F)	QQSF02SC2785
Q674	TRANSISTOR 2SC2785(F)	QQSF02SC2785
Q681⚠	TRANSISTOR KTC3199-GR-AT/P	NQS4KTC3199P
Q682⚠	TRANSISTOR 2SD400(E)	QQUE002SD400
Q696	TRANSISTOR KRC105M-AT/P	NQSZKRC105MP
Q801	TRANSISTOR 2SC2785(F)	QQSF02SC2785
Q811	TRANSISTOR 2SC2785(F)	QQSF02SC2785
RESISTORS		
R12	PCB JUMPER D0.6-P5.0	JW5.0T
R31	CARBON RES. 1/4W J 820 Ω	RCX4JATZ0821
R32	CARBON RES. 1/4W J 82 Ω	RCX4JATZ0820
R35	CARBON RES. 1/4W J 1k Ω	RCX4JATZ0102
R37	CHIP RES.(1608) 1/10W J 220 Ω	RRXAJB5Z0221
R38	CHIP RES.(1608) 1/10W J 15k Ω	RRXAJB5Z0153
R39	CHIP RES.(1608) 1/10W J 15k Ω	RRXAJB5Z0153
R44	CHIP RES.(1608) 1/10W J 100 Ω	RRXAJB5Z0101
R50	CARBON RES. 1/4W J 2.2k Ω	RCX4JATZ0222
R54	CARBON RES. 1/4W J 22k Ω	RCX4JATZ0223

Ref. No.	Description	Part No.
R101	CARBON RES. 1/4W J 100 Ω	RCX4JATZ0101
R102	CHIP RES.(1608) 1/10W J 1.5k Ω	RRXAJB5Z0152
R103	CHIP RES.(1608) 1/10W J 2.2k Ω	RRXAJB5Z0222
R104	CHIP RES.(1608) 1/10W J 2.7k Ω	RRXAJB5Z0272
R105	CHIP RES.(1608) 1/10W J 4.7k Ω	RRXAJB5Z0472
R106	CHIP RES.(1608) 1/10W J 8.2k Ω	RRXAJB5Z0822
R108	CHIP RES.(1608) 1/10W J 10k Ω	RRXAJB5Z0103
R109	CHIP RES.(1608) 1/10W J 10k Ω	RRXAJB5Z0103
R111	CARBON RES. 1/4W J 47 Ω	RCX4JATZ0470
R112	CHIP RES.(1608) 1/10W J 10k Ω	RRXAJB5Z0103
R113	CHIP RES.(1608) 1/10W J 270k Ω	RRXAJB5Z0274
R114	CHIP RES.(1608) 1/10W J 1k Ω	RRXAJB5Z0102
R116	CHIP RES. 1/10W J 0 Ω	RRXAJB5Z0000
R121	CARBON RES. 1/4W J 100 Ω	RCX4JATZ0101
R122	CARBON RES. 1/4W J 100 Ω	RCX4JATZ0101
R123	CHIP RES.(1608) 1/10W J 1k Ω	RRXAJB5Z0102
R131	CHIP RES.(1608) 1/10W J 470 Ω	RRXAJB5Z0471
R133	CHIP RES. 1/10W J 0 Ω	RRXAJB5Z0000
R134	CHIP RES.(1608) 1/10W J 4.7k Ω	RRXAJB5Z0472
R135	CHIP RES.(1608) 1/10W J 2.2k Ω	RRXAJB5Z0222
R136	CHIP RES.(1608) 1/10W J 100k Ω	RRXAJB5Z0104
R137	CHIP RES.(1608) 1/10W J 100 Ω	RRXAJB5Z0101
R138	CHIP RES.(1608) 1/10W J 220k Ω	RRXAJB5Z0224
R139	CARBON RES. 1/4W J 22k Ω	RCX4JATZ0223
R140	CHIP RES.(1608) 1/10W J 1k Ω	RRXAJB5Z0102
R141	CHIP RES. 1/10W J 0 Ω	RRXAJB5Z0000
R150	CHIP RES. 1/10W J 0 Ω	RRXAJB5Z0000
R153	CARBON RES. 1/4W J 100 Ω	RCX4JATZ0101
R154	CARBON RES. 1/4W J 100 Ω	RCX4JATZ0101
R161	CHIP RES.(1608) 1/10W J 470 Ω	RRXAJB5Z0471
R162	CHIP RES.(1608) 1/10W J 10k Ω	RRXAJB5Z0103
R163	CHIP RES.(1608) 1/10W J 470 Ω	RRXAJB5Z0471
R164	CHIP RES.(1608) 1/10W J 10k Ω	RRXAJB5Z0103
R165	CHIP RES.(1608) 1/10W J 4.7k Ω	RRXAJB5Z0472
R167	CHIP RES.(1608) 1/10W J 2.7k Ω	RRXAJB5Z0272
R168	CHIP RES.(1608) 1/10W J 4.7k Ω	RRXAJB5Z0472
R170	CHIP RES.(1608) 1/10W J 10k Ω	RRXAJB5Z0103
R171	CHIP RES.(1608) 1/10W J 560 Ω	RRXAJB5Z0561
R172	CHIP RES. 1/10W J 0 Ω	RRXAJB5Z0000
R173	CHIP RES.(1608) 1/10W J 22k Ω	RRXAJB5Z0223
R174	CHIP RES.(1608) 1/10W J 10k Ω	RRXAJB5Z0103
R176	CHIP RES.(1608) 1/10W J 100 Ω	RRXAJB5Z0101
R177	CHIP RES.(1608) 1/10W J 100 Ω	RRXAJB5Z0101
R178	CHIP RES.(1608) 1/10W J 470 Ω	RRXAJB5Z0471
R301	CHIP RES.(1608) 1/10W J 22k Ω	RRXAJB5Z0223
R302	CHIP RES.(1608) 1/10W J 10 Ω	RRXAJB5Z0100
R303	CHIP RES.(1608) 1/10W J 470 Ω	RRXAJB5Z0471
R305	CHIP RES.(1608) 1/10W J 470 Ω	RRXAJB5Z0471
R320	CHIP RES.(1608) 1/10W J 10k Ω	RRXAJB5Z0103
R323	CARBON RES. 1/4W J 390 Ω	RCX4JATZ0391
R326	CHIP RES.(1608) 1/10W J 100 Ω	RRXAJB5Z0101
R327	CHIP RES. 1/10W J 0 Ω	RRXAJB5Z0000
R328	CHIP RES.(1608) 1/10W J 3.3k Ω	RRXAJB5Z0332
R329	CHIP RES.(1608) 1/10W J 56k Ω	RRXAJB5Z0563
R330	CHIP RES.(1608) 1/10W J 1k Ω	RRXAJB5Z0102
R342	CHIP RES. 1/10W J 0 Ω	RRXAJB5Z0000
R344	CHIP RES.(1608) 1/10W J 6.8k Ω	RRXAJB5Z0682
R345	CHIP RES.(1608) 1/10W J 10k Ω	RRXAJB5Z0103
R346	CHIP RES.(1608) 1/10W J 1k Ω	RRXAJB5Z0102
R348	CARBON RES. 1/4W J 27k Ω	RCX4JATZ0273
R349	CHIP RES.(1608) 1/10W J 3.3k Ω	RRXAJB5Z0332
R355	CHIP RES.(1608) 1/10W J 33k Ω	RRXAJB5Z0333
R356	CHIP RES.(1608) 1/10W J 100 Ω	RRXAJB5Z0101

Ref. No.	Description	Part No.
R357	CHIP RES.(1608) 1/10W J 100 Ω	RRXAJB5Z0101
R358	CHIP RES.(1608) 1/10W J 100 Ω	RRXAJB5Z0101
R361	CHIP RES.(1608) 1/10W J 10k Ω	RRXAJB5Z0103
R362	CARBON RES. 1/4W J 100 Ω	RCX4JATZ0101
R363	CHIP RES.(1608) 1/10W J 47k Ω	RRXAJB5Z0473
R417	CHIP RES.(1608) 1/10W J 180k Ω	RRXAJB5Z0184
R422	CHIP RES.(1608) 1/10W J 8.2k Ω	RRXAJB5Z0822
R423	CHIP RES.(1608) 1/10W J 4.7k Ω	RRXAJB5Z0472
R427	CHIP RES.(1608) 1/10W J 8.2k Ω	RRXAJB5Z0822
R428	CHIP RES.(1608) 1/10W J 4.7k Ω	RRXAJB5Z0472
R445	CHIP RES.(1608) 1/10W J 3.3k Ω	RRXAJB5Z0332
R503	CARBON RES. 1/4W J 68k Ω	RCX4JATZ0683
R504	CARBON RES. 1/4W J 1 Ω	RCX4JATZ01R0
R505	CARBON RES. 1/4W J 1.8k Ω	RCX4JATZ0182
R506	CARBON RES. 1/4W J 2.7 Ω	RCX4JATZ02R7
R507	CARBON RES. 1/4W J 2.7 Ω	RCX4JATZ02R7
R508	CARBON RES. 1/4W J 2.7 Ω	RCX4JATZ02R7
R511	CARBON RES. 1/4W J 33k Ω	RCX4JATZ0333
R513⚠	METAL OXIDE FILM RES. 1W J 18 Ω	RN01180ZU001
R514	CARBON RES. 1/4W J 2.2k Ω	RCX4JATZ0222
R515	CHIP RES.(1608) 1/10W J 33k Ω	RRXAJB5Z0333
R516⚠	METAL OXIDE FILM RES. 1W J 18 Ω	RN01180ZU001
R520⚠	CHIP RES.(1608) 1/10W J 6.8k Ω	RRXAJB5Z0682
R522	CARBON RES. 1/4W J 22k Ω	RCX4JATZ0223
R535	CARBON RES. 1/4W J 470 Ω	RCX4JATZ0471
R541	CARBON RES. 1/4W J 680 Ω	RCX4JATZ0681
R542	CARBON RES. 1/4W J 680 Ω	RCX4JATZ0681
R543	CARBON RES. 1/4W J 680 Ω	RCX4JATZ0681
R544	CARBON RES. 1/4W J 1.8k Ω	RCX4JATZ0182
R551	METAL OXIDE FILM RES. 1W J 1k Ω	RN01102ZU001
R552⚠	METAL OXIDE FILM RES. 1W J 8.2 Ω	RN018R2ZU001
R553	CARBON RES. 1/4W J 2.2k Ω	RCX4JATZ0222
R554	CARBON RES. 1/4W J 3.9k Ω	RCX4JATZ0392
R555	CARBON RES. 1/4W J 2.2k Ω	RCX4JATZ0222
R556	CHIP RES.(1608) 1/10W J 47k Ω	RRXAJB5Z0473
R557	CHIP RES.(1608) 1/10W J 18k Ω	RRXAJB5Z0183
R558	CHIP RES.(1608) 1/10W J 220 Ω	RRXAJB5Z0221
R560	CHIP RES.(1608) 1/10W J 22k Ω	RRXAJB5Z0223
R561	CARBON RES. 1/4W J 1.2k Ω	RCX4JATZ0122
R562	CHIP RES.(1608) 1/10W J 100k Ω	RRXAJB5Z0104
R563	CARBON RES. 1/4W J 10k Ω	RCX4JATZ0103
R564	CHIP RES.(1608) 1/10W J 150k Ω	RRXAJB5Z0154
R566	CARBON RES. 1/4W J 8.2k Ω	RCX4JATZ0822
R568	CHIP RES.(1608) 1/10W J 1k Ω	RRXAJB5Z0102
R574	CARBON RES. 1/4W J 150 Ω	RCX4JATZ0151
R575⚠	CARBON RES. 1/4W J 15 Ω	RCX4JATZ0150
R576	CHIP RES.(1608) 1/10W J 1k Ω	RRXAJB5Z0102
R577	CARBON RES. 1/4W J 150 Ω	RCX4JATZ0151
R578⚠	CARBON RES. 1/4W J 15 Ω	RCX4JATZ0150
R579⚠	CARBON RES. 1/4W J 15 Ω	RCX4JATZ0150
R581	PCB JUMPER D0.6-P5.0	JW5.0T
R583⚠	METAL RESISTER. 2W J 2.7 Ω	RN022R7ZU001
R584⚠	CARBON RES. 1/4W J 1k Ω	RCX4JATZ0102
R587	CARBON RES. 1/4W J 2.7k Ω	RCX4JATZ0272
R588⚠	CARBON RES. 1/4W J 120k Ω	RCX4JATZ0124
R589	CARBON RES. 1/4W J 56k Ω	RCX4JATZ0563
R590	CARBON RES. 1/4W J 180k Ω	RCX4JATZ0184
R591⚠	CARBON RES. 1/4W J 180k Ω	RCX4JATZ0184
R592⚠	CARBON RES. 1/4W J 220k Ω	RCX4JATZ0224
R593⚠	CARBON RES. 1/4W J 68k Ω	RCX4JATZ0683
R594⚠	CARBON RES. 1/4W J 100k Ω	RCX4JATZ0104
R595	CARBON RES. 1/4W J 2.7k Ω	RCX4JATZ0272
R596	CARBON RES. 1/4W J 12k Ω	RCX4JATZ0123

Ref. No.	Description	Part No.
R597	CARBON RES. 1/4W J 2.7k Ω	RCX4JATZ0272
R598⚠	CARBON RES. 1/4W J 47k Ω	RCX4JATZ0473
R599⚠	CARBON RES. 1/4W J 47k Ω	RCX4JATZ0473
R601⚠	CEMENT RES. 5W K 0.56 Ω	RW05R56DP007
R602⚠	PCB JUMPER D0.6-P5.0	JW5.0T
R603	PCB JUMPER D0.6-P5.0	JW5.0T
R604	CARBON RES. 1/4W J 820k Ω	RCX4JATZ0824
R605	CARBON RES. 1/4W J 820k Ω	RCX4JATZ0824
R607	CARBON RES. 1/4W J 270 Ω	RCX4JATZ0271
R608	CARBON RES. 1/4W J 220 Ω	RCX4JATZ0221
R609	CARBON RES. 1/4W J 820k Ω	RCX4JATZ0824
R613⚠	METAL OXIDE FILM RES. 2W J 0.27 Ω	RN02JZLZ0R27
R614	PCB JUMPER D0.6-P5.0	JW5.0T
R615	CARBON RES. 1/4W J 270k Ω	RCX4JATZ0274
R616	CARBON RES. 1/4W J 1.2k Ω	RCX4JATZ0122
R618	CARBON RES. 1/4W J 180 Ω	RCX4JATZ0181
R621	CARBON RES. 1/4W J 1k Ω	RCX4JATZ0102
R641	CARBON RES. 1/4W J 6.8k Ω	RCX4JATZ0682
R642	CARBON RES. 1/4W J 6.8k Ω	RCX4JATZ0682
R650⚠	CARBON RES. 1/4W J 8.2k Ω	RCX4JATZ0822
R651⚠	METAL OXIDE FILM RES. 2W J 8.2k Ω	RN02822ZU001
R652	CARBON RES. 1/4W J 82k Ω	RCX4JATZ0823
R653	CARBON RES. 1/4W J 22k Ω	RCX4JATZ0223
R654⚠	CARBON RES. 1/4W J 2.2k Ω	RCX4JATZ0222
R655	CARBON RES. 1/4W J 180 Ω	RCX4JATZ0181
R656	CHIP RES.(1608) 1/10W J 15k Ω	RRXAJB5Z0153
R657	CHIP RES.(1608) 1/10W J 15k Ω	RRXAJB5Z0153
R658	CARBON RES. 1/4W J 560k Ω	RCX4JATZ0564
R659	CHIP RES.(1608) 1/10W J 22k Ω	RRXAJB5Z0223
R660	CARBON RES. 1/4W J 1k Ω	RCX4JATZ0102
R661⚠	CARBON RES. 1/4W J 33k Ω	RCX4JATZ0333
R662⚠	CARBON RES. 1/4W J 33k Ω	RCX4JATZ0333
R663⚠	CARBON RES. 1/4W J 8.2k Ω	RCX4JATZ0822
R664⚠	CARBON RES. 1/4W J 820 Ω	RCX4JATZ0821
R665⚠	CARBON RES. 1/4W J 6.8k Ω	RCX4JATZ0682
R667⚠	CARBON RES. 1/4W J 8.2k Ω	RCX4JATZ0822
R668⚠	CARBON RES. 1/4W J 10k Ω	RCX4JATZ0103
R669⚠	CARBON RES. 1/4W J 10k Ω	RCX4JATZ0103
R670⚠	CARBON RES. 1/4W J 33k Ω	RCX4JATZ0333
R671	CARBON RES. 1/4W J 3.9k Ω	RCX4JATZ0392
R672	CARBON RES. 1/4W J 3.9k Ω	RCX4JATZ0392
R673	CARBON RES. 1/4W J 100k Ω	RCX4JATZ0104
R674	CHIP RES.(1608) 1/10W J 22k Ω	RRXAJB5Z0223
R675	CARBON RES. 1/4W J 15k Ω	RCX4JATZ0153
R676	CHIP RES.(1608) 1/10W J 10k Ω	RRXAJB5Z0103
R677	CARBON RES. 1/4W J 68k Ω	RCX4JATZ0683
R678	CHIP RES.(1608) 1/10W J 47k Ω	RRXAJB5Z0473
R680	CHIP RES.(1608) 1/10W J 10k Ω	RRXAJB5Z0103
R681	CARBON RES. 1/4W J 5.6 Ω	RCX4JATZ05R6
R682⚠	METAL OXIDE FILM RES. 1W J 5.6 Ω	RN015R6ZU001
R6841	CARBON RES. 1/4W J 1.5 Ω	RCX4JATZ01R5
R685⚠	CARBON RES. 1/4W J 1.2 Ω	RCX4JATZ01R2
R686	CARBON RES. 1/4W J 10 Ω	RCX4JATZ0100
R687	CARBON RES. 1/4W J 10 Ω	RCX4JATZ0100
R688⚠	CARBON RES. 1/4W J 1.5 Ω	RCX4JATZ01R5
R689	PCB JUMPER D0.6-P12.5	JW12.5T
R694	CARBON RES. 1/4W J 4.7k Ω	RCX4JATZ0472
R696	CARBON RES. 1/4W J 10 Ω	RCX4JATZ0100
R701	CARBON RES. 1/4W J 75 Ω	RCX4JATZ0750
R704	CHIP RES.(1608) 1/10W J 47k Ω	RRXAJB5Z0473
R705	CHIP RES.(1608) 1/10W J 15k Ω	RRXAJB5Z0153
R706	CHIP RES.(1608) 1/10W J 12k Ω	RRXAJB5Z0123
R707	CHIP RES.(1608) 1/10W J 47k Ω	RRXAJB5Z0473

Ref. No.	Description	Part No.
R708	CHIP RES.(1608) 1/10W J 15k Ω	RRXAJB5Z0153
R709	CHIP RES.(1608) 1/10W J 12k Ω	RRXAJB5Z0123
R711	CHIP RES.(1608) 1/10W J 82 Ω	RRXAJB5Z0820
R712	CHIP RES.(1608) 1/10W J 10k Ω	RRXAJB5Z0103
R713	CHIP RES.(1608) 1/10W J 330 Ω	RRXAJB5Z0331
R716	CHIP RES.(1608) 1/10W J 82 Ω	RRXAJB5Z0820
R717	CHIP RES.(1608) 1/10W J 10k Ω	RRXAJB5Z0103
R718	CHIP RES.(1608) 1/10W J 330 Ω	RRXAJB5Z0331
R721	CHIP RES.(1608) 1/10W J 75 Ω	RRXAJB5Z0750
R724	CHIP RES.(1608) 1/10W J 47k Ω	RRXAJB5Z0473
R725	CHIP RES.(1608) 1/10W J 15k Ω	RRXAJB5Z0153
R726	CHIP RES.(1608) 1/10W J 12k Ω	RRXAJB5Z0123
R727	CHIP RES.(1608) 1/10W J 47k Ω	RRXAJB5Z0473
R728	CHIP RES.(1608) 1/10W J 15k Ω	RRXAJB5Z0153
R729	CHIP RES.(1608) 1/10W J 12k Ω	RRXAJB5Z0123
R751	CHIP RES.(1608) 1/10W J 22k Ω	RRXAJB5Z0223
R752	CARBON RES. 1/4W J 27k Ω	RCX4JATZ0273
R761	CHIP RES.(1608) 1/10W J 22k Ω	RRXAJB5Z0223
R762	CHIP RES.(1608) 1/10W J 27k Ω	RRXAJB5Z0273
R771	CHIP RES.(1608) 1/10W J 4.7k Ω	RRXAJB5Z0472
R772	CHIP RES.(1608) 1/10W J 10k Ω	RRXAJB5Z0103
R801	CARBON RES. 1/2W J 100 Ω	RCX2JZQZ0101
R802	CARBON RES. 1/2W J 100 Ω	RCX2JZQZ0101
R803	CARBON RES. 1/4W J 100 Ω	RCX4JATZ0101
R804	CARBON RES. 1/4W J 100 Ω	RCX4JATZ0101
R811	CHIP RES.(1608) 1/10W J 10k Ω	RRXAJB5Z0103
R812	CHIP RES.(1608) 1/10W J 82k Ω	RRXAJB5Z0823
R813	CHIP RES.(1608) 1/10W J 1k Ω	RRXAJB5Z0102
R814	CHIP RES.(1608) 1/10W J 4.7k Ω	RRXAJB5Z0472
R841	METAL OXIDE FILM RES. 2W J 3.9 Ω	RN023R9ZU001
R842⚠	PCB JUMPER D0.6-P5.0	JW5.0T
R843⚠	CHIP RES.(1608) 1/10W J 2.2k Ω	RRXAJB5Z0222
R862	CHIP RES. 1/10W J 0 Ω	RRXAJB5Z0000
R863	CHIP RES.(1608) 1/10W J 10k Ω	RRXAJB5Z0103
SWITCHES		
SW101	TACT SWITCH SKQSAB	SST0101AL038
SW102	TACT SWITCH SKQSAB	SST0101AL038
SW103	TACT SWITCH SKQSAB	SST0101AL038
SW104	TACT SWITCH SKQSAB	SST0101AL038
SW105	TACT SWITCH SKQSAB	SST0101AL038
SW106	TACT SWITCH SKQSAB	SST0101AL038
MISCELLANEOUS		
AC601⚠	AC CORD PB8K9F4110AB057	WAC0172LW020
B2	HEAT SINK(PIJ)ASSEMBLY L2700UA	0EM408529
B3	HEAT SINK(PIH)ASSEMBLY L2700UA	0EM408525
B4	HEAT SINK(PII)ASSEMBLY L2700UA	0EM408527
BC11	BEAD INDUCTORS FBR07HA121TB-00	LLBF00ZTU021
BC571	BEAD INDUCTORS FBA04HA600VB-00	LLBF00STU026
BC572	PCB JUMPER D0.6-P5.0	JW5.0T
BC603	BEAD INDUCTORS FBR07HA121TB-00	LLBF00ZTU021
BC652	PCB JUMPER D0.6-P5.0	JW5.0T
BC653	BEAD INDUCTORS FBR07HA121TB-00	LLBF00ZTU021
BC654	BEAD INDUCTORS FBR07HA121TB-00	LLBF00ZTU021
BC655	BEAD INDUCTORS FBR07HA121TB-00	LLBF00ZTU021
BC657	BEAD INDUCTORS FBR07HA121TB-00	LLBF00ZTU021
BC691	BEAD INDUCTORS FBR07HA121TB-00	LLBF00ZTU021
CF32	CERAMIC FILTER SFSRA4M50CF00-B0	FBB455PMR004
CLN301	WIRE ASSEMBLY WX1L1200-102	WX1L1200-102
CLN501	WIRE ASSEMBLY WX1L1200-103	WX1L1200-103
F601⚠	FUSE 4A/125V 237 TYPE	PAGJ20CAG402
FH601	FUSE HOLDER MSF-015	XH01Z00LY001
FH602	FUSE HOLDER MSF-015	XH01Z00LY001

Ref. No.	Description	Part No.
GP642⚠	GAP. FNR-G3.10D	FAZ000LD6005
JC703	CHIP RES. 1/10W J 0 Ω	RRXAJB5Z0000
JC704	CHIP RES. 1/10W J 0 Ω	RRXAJB5Z0000
JK701	RCA JACK(YELLOW) MTJ-032-06B-20	JXRL010LY050
JK702	RCA JACK(WHITE) MTJ-032-06B-22	JXRL010LY052
JK703	RCA JACK 1P(RED)WITH SW ITCH AV1-09S-2	JYRL010RP008
JK711	RCA JACK 3P (SW) MSP-213-V2-432	JYRL030LY008
JK721	Y/C JACK 1P(SW) MDC-070V1-A	JYEL040LY002
JK801	HEADPHONE JACK MSJ-035-10A B	JYSL020LY002
JS571	PCB JUMPER D0.6-P7.5	JW7.5T
L1	SCREW B-TIGHT D3X8 BIND HEAD+	GBMB3080
PS691⚠	THERMISTOR ZPB58BL7R0F	QNQZ58BL7R0F
RL601⚠	POWER RELAY SDT-S-112LMR	MRNDC12QN014
SA601⚠	SURGE ABSORBER PVR-07D471KB	NVQZ07D471KB
SF11	SAW FILTER SAFHM45M7VAJZ01B03	FBB456PMR012
T571⚠	FLYBACK TRANSFORMER JF0501-2167	LTF00CPXB030
T572	HORIZONTAL DRAIVE TRANS CSA-LF327A	LTH00CPSA006
T601⚠	SWITCHING TRANS 5772-S02	LTT00CPKT188
TP300	PCB JUMPER D0.6-P10.0	JW10.0T
TP601	PCB JUMPER D0.6-P20.0	JW20.0T
TU11	TUNER UNIT TEFH9-001A	UTUNNTUAL042
RCV101	REMOCON RECEIVE UNIT PIC-37042SR	USESJRSKK034
VR561	CARBON P.O.T. 30k Ω B	VRCB303KA011
VR562	CARBON P.O.T. 5k Ω B	VRCB502KA011
VR661⚠	CARBON P.O.T. 20k Ω B	VRCB203KA011
X301	XTAL 3.579545 MHz	FXD355LLN003

CRT CBA

Ref. No.	Description	Part No.
	CRT CBA Consists of the following:	----------
CAPACITORS		
C1502	ELECTROLYTIC CAP. 47μF/16V M	CE1CMASDL470
C1510	CERAMIC CAP. B K 1000pF/2KV	CCD3DKD0B102
C1511	CERAMIC CAP.(AX) B K 470pF/50V	CCA1JKT0B471
C1521	CERAMIC CAP.(AX) B K 470pF/50V	CCA1JKT0B471
C1531	CERAMIC CAP.(AX) B K 470pF/50V	CCA1JKT0B471
CONNECTOR		
CN1501	PIN CONNECTOR 005P-5100	JTEA001TG001
DIODES		
D1502	BEAD INDUCTORS FBR07HA121TB-00	LLBF00ZTU021
D1511	SWITCHING DIODE 1SS133(T-77)	QDTZ001SS133
D1521	SWITCHING DIODE 1SS133(T-77)	QDTZ001SS133
D1531	SWITCHING DIODE 1SS133(T-77)	QDTZ001SS133
COIL		
L1501	PCB JUMPER D0.6-P5.0	JW5.0T
TRANSISTORS		
Q1511	TRANSISTOR KTC3503Y	NQWY0KTC3503
Q1521	TRANSISTOR KTC3503Y	NQWY0KTC3503
Q1531	TRANSISTOR KTC3503Y	NQWY0KTC3503
RESISTORS		
R1501	CARBON RES. 1/4W J 100 Ω	RCX4JATZ0101
R1502	CHIP RES.(1608) 1/10W J 100 Ω	RRXAJB5Z0101
R1503	CARBON RES. 1/4W J 100 Ω	RCX4JATZ0101
R1510⚠	METAL RESISTOR 3W J 10k Ω	RN03103ZU001
R1511	CARBON RES. 1/4W J 1.5k Ω	RCX4JATZ0152
R1512	CARBON RES. 1/4W J 1.5k Ω	RCX4JATZ0152
R1515	CARBON RES. 1/4W J 2.7k Ω	RCX4JATZ0272
R1518	CARBON RES. 1/4W J 330 Ω	RCX4JATZ0331
R1519	CHIP RES.(1608) 1/10W J 100 Ω	RRXAJB5Z0101
R1520⚠	METAL RESISTOR 3W J 10k Ω	RN03103ZU001
R1521	CARBON RES. 1/4W J 1.5k Ω	RCX4JATZ0152

Ref. No.	Description	Part No.
R1522	CARBON RES. 1/4W J 1.5k Ω	RCX4JATZ0152
R1525	CARBON RES. 1/4W J 2.7k Ω	RCX4JATZ0272
R1528	CARBON RES. 1/4W J 330 Ω	RCX4JATZ0331
R1529	CHIP RES.(1608) 1/10W J 100 Ω	RRXAJB5Z0101
R1530⚠	METAL RESISTOR 3W J 10k Ω	RN03103ZU001
R1531	CARBON RES. 1/4W J 1.5k Ω	RCX4JATZ0152
R1532	CARBON RES. 1/4W J 1.5k Ω	RCX4JATZ0152
R1535	CARBON RES. 1/4W J 2.7k Ω	RCX4JATZ0272
R1538	CARBON RES. 1/4W J 330 Ω	RCX4JATZ0331
R1539	CHIP RES.(1608) 1/10W J 100 Ω	RRXAJB5Z0101
MISCELLANEOUS		
JK1501⚠	CRT SOCKET ISHD40S	JSCC290PK008
JS1511	PCB JUMPER D0.6-P5.0	JW5.0T
JS1521	PCB JUMPER D0.6-P5.0	JW5.0T
JS1531	PCB JUMPER D0.6-P5.0	JW5.0T

DCT2405R
L3401CB
2005-08-09